X6 User Manual

Insta360 X6

Product Introduction

Insta360 X6

1. Front Lens
2. Windproof Microphone
3. Ambient Light Sensor (Front)
4. Touchscreen
5. Indicator Light
6. Windproof Microphone
7. Power Button
8. Shutter Button
9. USB Cover
10. Rear Lens
11. Windproof Microphone
12. Ambient Light Sensor (Back)
13. Quick Button
14. Indicator Light
15. Windproof Microphone
16. Speaker
17. Battery Cover
18. Magnetic Connector Pins
19. 1/4" Mounting Point
20. Quick Release Mounting Point

In the Box (Standard Bundle)

The Standard Bundle includes the following items:

- Insta360 X6 × 1
- USB-C Cable × 1
- Camera protective cover × 1
- Lens Cloth × 1

Optional Accessories

To meet the shooting requirements of more scenarios, you can also purchase the following official accessories:

- **Foldable Selfie Stick**: Can be switched between a selfie stick and a tripod mode. Two microSD cards can be stored inside the decorative cap.
- **Lens Cap**: Protects the lenses and any other lens guards installed on the camera.
- **X6 Battery**: Serves as a backup external power supply, making it convenient to swap out at any time during long-term outdoor shooting or high-specification recording.
- **Fast Charge Hub:** Features a dual-slot design and supports modular cascading, allowing it to efficiently charge up to 3 batteries simultaneously, significantly reducing charging wait time. It also doubles as a storage space for SD cards, making it easy to carry around and protect data. Used in conjunction with extra batteries, it delivers continuous, stable, and powerful runtime assurance. (Note: The overseas version supports reverse charging functionality; the domestic version does not support reverse charging due to relevant regulatory requirements.)

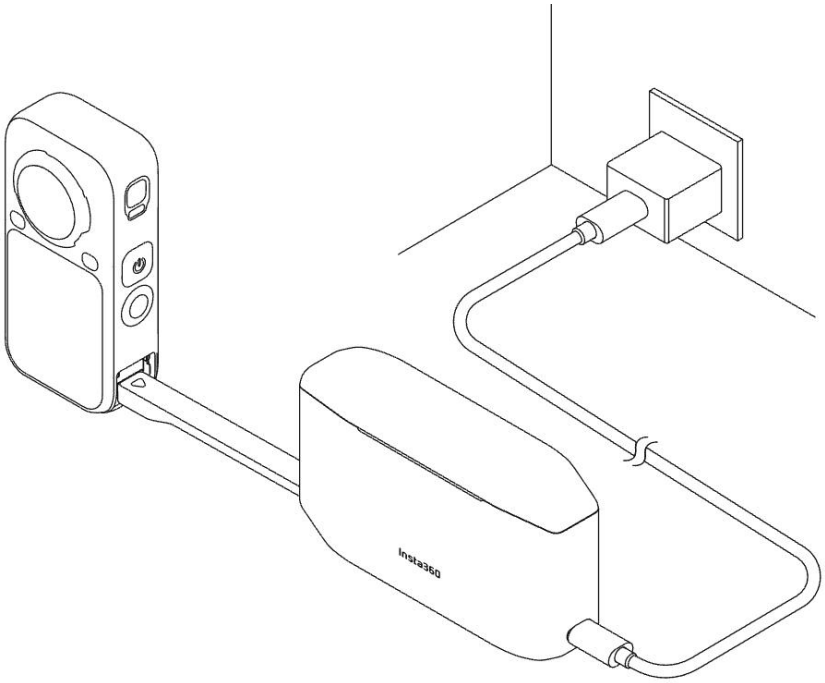
Insta360

First Use

Insert the microSD Card

1. Press the lock buckle on the battery cover and slide it in the direction indicated by the arrow to open the cover.

2. The microSD card slot is located next to the battery compartment. Orient the microSD card so that the metal contacts face the slot, then insert it in the correct direction.

3. Close the battery cover and slide it back to lock it in place. Ensure that the orange indication mark near the hinge is completely covered and no longer visible to guarantee proper waterproofing performance.

Note: X6 features 47 GB of built-in storage (64 GB total), allowing for recording without a microSD card. For more storage management operations, please refer to the "File Storage" section.

Charging

1. Slide down the cover switch to open the USB cover.

2. Connect the camera to a charger using the official cable to start charging.

3. When the cable is first inserted, the charging progress will be displayed, and the touchscreen will then turn off. Once the screen turns off, tap the screen to view the current charging progress.

Charging Time

Fast charging can be achieved when the camera remains powered off using a 30W adapter that complies with the PD fast charging protocol (and supports the PPS intelligent voltage adjustment feature):

- 0-80%: 24min
- 0-100%: 35min

When charging is complete, the LED indicator stays solid green, indicating a full charge.

*Charging times are measured in a 25℃ laboratory environment using a 30W USB-C charger that supports the PD3.0 PPS protocol while the camera is powered off. Actual charging times may vary depending on different conditions.

Download & Activation

X6 must be activated via the Insta360 app before its first use.

You can download the Insta360 app through any of the following methods:

- Scan the QR code displayed on the camera touchscreen when turning it on for the first time.
- Scan the QR code printed on the accessories box.
- Visit the "Downloads" on the official Insta360 website to download the Insta360 app.
- Search for and download the Insta360 App in the Google Play Store or Apple App Store.

Activation Steps

1. Turn on the camera.
2. Enable Wi-Fi and Bluetooth on your smartphone.
3. Open the Insta360 app, tap the camera icon at the bottom of the page, and select your X6 based on the camera name and the last 6 digits of the serial number displayed in the pop-up window. For the first connection, tap "Confirm" on the camera touchscreen.
4. Follow the on-screen instructions to activate the device.

Placing the Device

X6 features a brand-new appearance that supports stable horizontal or vertical placement, effectively preventing lens scratches caused by the camera tipping over.

Camera Firmware & Insta360 App & Studio Updates

Checking for the Latest Firmware and Client Version Numbers

You can obtain the latest version numbers and update logs for the Insta360 X6 firmware, app, and Studio desktop software via the official Downloads center at any time. Meanwhile, when the camera is connected to the Insta360 app, the system will automatically detect and pop up a prompt for new versions. To ensure the best user experience with your camera, please update the firmware in a timely manner.

If your device fails to retrieve the latest firmware, it may be due to the following reasons:

- Batch Rollout Mechanism: In the initial stage of a new firmware release, the system usually adopts a batch-by-batch rollout. Your current device might not be included in the initial release batch, so please be patient.
- Network Latency: There may be latency in the mobile phone's current network connection, resulting in a failure to successfully refresh the update status from the server.

If you wish to experience the latest features immediately, you can try the following methods:

- Manual Upgrade Check via app: Completely turn off and restart your phone's Wi-Fi and Bluetooth, disconnect and reconnect the camera, and enter the "Firmware Version" page in the app again to try a manual refresh.
- Manual Upgrade via Computer: Go to the "Downloads" center on the official Insta360 website to download the latest firmware package, and perform a manual overwrite installation according to the "Upgrade via Computer" method below.

Checking Current Firmware Version and Client Version Numbers

Firmware Version Number:

- On the camera: Swipe down to enter the Shortcut Menu, and tap "Camera Info" to view the camera firmware version number.
- Insta360 app: Go to "Settings" > "Device Firmware Info" to view the camera firmware version number.

Client Version Number:

- Insta360 app: Go to "Settings" > "App Settings" > "About Insta360" to view the current app version number.
- Insta360 Studio: Click the "Insta360 Studio" icon in the upper left corner of the screen and select "About" to view the current computer client version number.

Update via Insta360 App (Recommended)

1. Enable Wi-Fi and Bluetooth on your phone, then connect X6 to the Insta360 app.
2. If a new firmware version is available, a reminder will pop up on the app homepage. Follow the on-screen prompts to complete the download and transfer. Alternatively, in the Insta360 app, go to "Settings" > "Device Firmware Info" to check for new updates.
3. Once the transfer is complete, the camera will automatically begin updating (the indicator light will flash blue). The camera will automatically restart after the update finishes.

Please ensure the camera's battery level is above 20% before updating. Do not power off, remove the battery, or remove the storage card during the update process.

Update Failure Troubleshooting:

- Ensure the camera and phone are placed close to each other.

- Keep the app running in the foreground; do not exit or switch it to the background.
- Ensure the phone's network environment is stable and optimal.
- *If the upgrade still fails after confirming that all the above conditions are met, please restart the device and try again, or upgrade via a computer.*

Update via Computer

1. Power on the camera, connect the camera to your computer using the official data cable, and select "File Transfer" mode.
2. Visit the official Insta360 website to download the latest firmware to your computer.
3. Copy the downloaded Insta360X6FW.bin firmware update file directly to the root directory of the camera storage space (do not modify the file name or place it inside any folder).
4. Disconnect X6 from the computer, and the camera will automatically begin updating (the indicator light will flash blue).
5. Once the update is complete, X6 will automatically restart.

Please ensure the camera's battery level is above 20% before starting this process. Do not power off, remove the battery, or remove the storage card during any update.

Client App & Studio Updates

Mobile App Update Methods

- **App Store Update:** iOS users please go to the App Store; Android users may use the Google Play Store or similar platforms. Search for "Insta360", and update to the latest version.
- **Website Download Update:** You can also go directly to the "Downloads" center on the official Insta360 website to download and install

the latest installation package.

Computer Studio Update Methods

- **In-App Online Update:** Open the Studio software on your computer. The system will automatically detect the version, and you can click to upgrade online according to the pop-up prompt.
- **Website Download Update:** Go to the "Downloads" center on the official Insta360 website to download and overwrite-install the latest installation package applicable to Windows or Mac systems.

Camera Basics

Button Instructions

Power Button

Camera Status	Button Operation	Function
Powered Off	Press	• Power on
Powered On	Press	• Turn the touchscreen on/off
	Press and hold for 1s	• Power off
	Press and hold for 7s	• Force shutdown (in the event of an error)

Quick Button

Camera Status	Button Operation	Function
Powered On	Press	• Switches between 360 Video, Flat Video, and InstaFrame 2.0 by default. • This can be customized to other functions in **Settings** > **Quick Button Customization**.

Charging (Powered Off)	Press	• Views charging status. *(Note: "Charging" may still be displayed when fully charged; please refer to the actual battery level shown.)*

Shutter Button

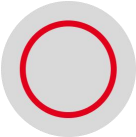

Camera Status	Button Operation	Function
Powered Off	Press	• Starts QuickCapture. Press again to stop recording and return to the preview page. The camera will automatically power off if no operation is performed within 5 seconds after QuickCapture ends. **QuickCapture must be enabled in the camera: Swipe down on the screen to enter the **Shortcut Menu**, then tap **"QuickCapture"** to configure the settings.*
Powered On	Press	• **On the preview page:** Press to start taking photos or recording. • **In video mode:** Press again to stop recording.

Virtual Buttons

Preview Page

Icon	Operation	Function
	Press (with pressure)	• Video Mode: Starts/stops recording. • Photo Mode: Takes a photo or stops shooting (specific modes only).
	Press (with pressure)	• Enters the Mode Selection Page.

Mode Selection Page

Icon	Operation	Function
	Press (with pressure)	Enters the Presets List.
	Press (with pressure)	360 Mode: Quickly switches between Photo and Video modes. Flat Mode: Quickly switches between Photo, Video and InstaFrame 2.0 modes.

Using the Touchscreen

Tapping or Swiping the Touchscreen

The touchscreen displays the camera homepage once the camera is powered on, showing essential information such as the shooting mode, battery level, and remaining storage capacity. You can operate the camera by tapping or swiping the touchscreen.

Swipe down from the top edge of the screen Enters the Shortcut Menu.	**Swipe across the center of the screen** Adjusts the preview perspective in 360 Mode.

Swipe right from the left edge of the screen Enters the Album Page.	**Swipe left from the right edge of the screen** Enters the Shooting Parameter Settings.	**Swipe up from the bottom edge of the screen** Enters the Shooting Specification Settings.

Shooting Interface

The following description uses the touchscreen display in Video Mode and Flat Mode as an example.

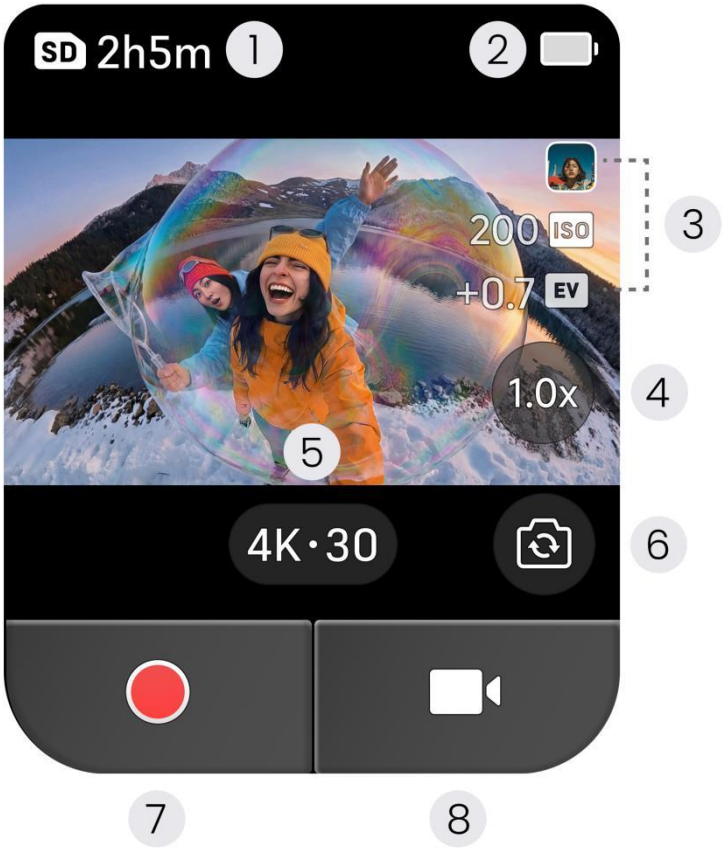

1. **Storage Capacity**: Displays the remaining number of photos or video recording time available for the currently selected storage medium and shooting specifications.
    - "SD" displayed: Indicates that the footage will be saved to an external microSD card.
    - X6 Camera icon displayed: Indicates that the footage will be saved to the camera's built-in storage.
2. **Battery Level**: Displays the remaining battery power of the camera.
3. **Shooting Parameters**: Displays settings such as filters, EV (Exposure Compensation), and ISO. (Note: This is only displayed when manually adjusting parameter settings.)
4. **Zoom Ratio**: Tap to zoom in/out or to enable/disable horizon lock and distortion correction (supported in specific modes only).

5. **Shooting Specification**: Tap to select the resolution and frame rate.
6. **Lens Switching**: Tap to switch between the front and rear lenses.
7. **Virtual Shutter Button**: Press (with pressure) to start or stop recording.
8. **Shooting Mode Icon**: Press (with pressure) to switch between different shooting modes in 360 or Flat mode.

Depending on the camera's settings and status, icons for the Bluetooth Selfie Stick, Remote, Headset, Microphone, Gesture Control, and AI Highlights may also appear at the top of the screen. Due to limited display space, some icons may not be fully shown.

Other operational icons, such as the countdown timer, HDR status, or zoom ratio, may also be displayed based on the specific camera settings and status. Please refer to the actual display on your screen.

Mirroring in the preview state is currently not supported in 360 Mode, nor is it supported in the exported footage. In Flat Mode, mirroring during preview is supported in all modes except Gimbal Mode; mirroring for exported footage needs to be configured via the Insta360 app mirroring settings.

Shooting Mode

Press the Shooting Mode Icon at the bottom right of the preview page with pressure, then swipe left or right to select different shooting modes.

The following options are available at the bottom of the interface:

- **Presets**: Quickly applies custom parameter combinations optimized for different scenarios.
- **Quick Switch**: Switches rapidly between Video and Photo modes.

360 Mode:

Shooting Mode	Description
Video	Records ultra-high-definition 360 video at up to 8K resolution for most scenarios.
Photo	Ideal for capturing 360 photos in most scenarios.
PureVideo	Suitable for shooting night videos to obtain a cleaner and clearer image.
Timelapse	Keep the camera stationary. Suitable for recording the passage of time, such as sunrises, sunsets, and heavy traffic.
TimeShift	Move with the camera. Suitable for capturing hyperlapse videos while walking, cycling, or traveling.
Bullet Time	Captures low-speed, cinematic wrapping videos. It is recommended to use Bullet Time accessories for shooting.
Loop Recording	Continuous recording that only saves the last fixed duration of video.
Road Mode	Records continuously within a set storage space. The earliest recorded footage will be overwritten once the storage is full.
Starlapse	Continuously shoots and stores starry night photos, automatically creating a starlapse effect.
Interval	Automatically takes photos at specified intervals, suitable for manually compiling timelapse videos during post-editing.

360 Shooting Tips:

The 360-degree frame is compiled by stitching together footage captured by the front and rear fisheye lenses. To ensure an optimal automatic stitching effect, it is recommended to face either of the lenses directly (front or back) during shooting. Avoid standing too close to the side stitching line of the camera body.

Underwater Shooting Tips:

Due to complex light refraction underwater, shooting directly in water will cause the camera to lose focus, lead to poor stitching, or even result in visible stitch lines. Using the official Dive Case can effectively improve the shooting results. When using the Dive Case, ensure the camera lens is perpendicular to the subject to minimize stitching seams.

Flat Mode:

Shooting Mode	Description
Video	Records high-definition video at up to 5K resolution for most scenarios.
PureVideo	Suitable for shooting night videos to obtain a cleaner and clearer image.
FreeFrame Video	Requires stabilization processing in the Insta360 app/Studio during post-editing. Supports aspect ratio adjustments and horizon lock post-shoot.
Loop Recording	Continuous recording that only saves the last fixed duration of video.
InstaFrame 2.0	Exports flat video directly with built-in camera movements and advanced tracking effects. It simultaneously records a 360 video, allowing for free

	framing and reframing later in the Insta360 app/Studio.
Photo	Captures photos in most scenarios.

Is it normal for the camera body to become hot during shooting?

When shooting in 8K resolution or certain modes, high computational power is required, making a rise in body temperature a normal phenomenon. Trying the following recommendations can lower camera power consumption, extend battery life, and enhance the shooting experience:

- Adjust Screen Timeout: Shortcut Menu > Settings > Display Setup > Screen Auto Sleep, and set a shorter screen timeout duration.

Shortcut Menu

Swipe down from the top of the touchscreen to enter the Shortcut Menu.

- **Storage Management (Swipe Right On-Screen):** Selects either the built-in storage or an external microSD card as the storage location for your footage, or formats the storage space.

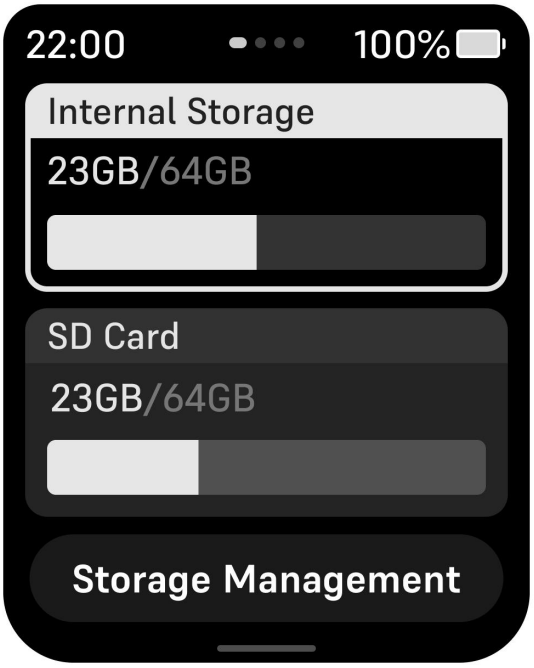

- **Lock Screen**: Locks the touchscreen. Once locked, swipe across the screen to unlock it.
- **Settings**: Tap to enter more camera settings.
- **Brightness Adjustment**: Opens the brightness slider. Swipe to adjust the screen brightness manually, or select Auto-Brightness.
- **Volume**: Adjusts the camera speaker volume. Options include Adaptive, High, Medium, Low, and Mute (Default is Medium).
- **Indicator Light**: Enables or disables the camera indicator lights.
- **QuickCapture**: Once enabled, press the Shutter Button when the camera is powered off to quickly start recording. You can specify a shooting mode or use the last used mode.
- **Accessories**: Adds or manages Bluetooth accessories (such as wireless microphones and remotes).
- **Quick Capture**: Triggers the camera to start/stop recording or take photos using specific actions, gestures, or voice control without pressing any buttons.
- **AI Director**: Automatically identifies and marks highlights in each piece of footage, speeding up editing once connected to the Insta360 app.
- **Audio Settings**: Configures audio effects and camera audio backup options.
- **Presets**: Quickly accesses custom modes and specific parameters for efficient shooting across different scenarios.
- **Pre-Recording**: Once enabled, saves a set duration of video before the Shutter Button is pressed. Supports up to 8K video pre-recording. The supported modes are as follows:
    - **360 Mode**: Video, PureVideo
    - **Flat Mode**: Video, PureVideo, FreeFrame Video
- **Endurance Mode**: Restricts certain functions to save power and extend battery life.
- **Auto PureVideo**: Automatically switches to PureVideo Mode for a

cleaner image in low light conditions. Supports up to 30fps in 360 Video and up to 60fps in Flat Mode. The camera will not automatically switch if higher specifications are set.

- **Full Screen Press:** Firmly press anywhere on the screen to start/stop video recording or take a photo.

Shooting Specification Settings

Swipe up from the bottom of the touchscreen to enter the Shooting Specification Settings.

360 Mode:

Shooting Mode	Adjustable Parameters
Video	Resolution, Frame Rate
PureVideo	Resolution, Frame Rate
Timelapse	Resolution, Frame Rate, Recording Duration, Scene, Interval
TimeShift	Shooting Duration, Speed, Resolution, Frame Rate
Bullet Time	Resolution, Frame Rate
Loop Recording	Loop Duration, Resolution, Frame Rate
Road Mode	Storage Limit, Charging & Shutdown Settings, Time Stamp, Resolution, Frame Rate
Starlapse	Output Type, Countdown, Photo Format, Resolution, Shooting Duration

Interval	Interval, Countdown, Photo Format, Resolution, Shooting Duration
Photo	Active HDR, Photo Format, Resolution, Countdown

Flat Mode:

Shooting Mode	Adjustable Parameters
Video	Ratio, Resolution, Frame Rate, Horizon Lock
FreeFrame Video	Ratio, Resolution, Frame Rate, Horizon Lock
PureVideo	Ratio, Resolution, Frame Rate, Horizon Lock
InstaFrame 2.0	Virtual Gimbal, Ratio, 360 Video Backup, Flat Video Resolution, Frame Rate
Loop Recording	Ratio, Resolution, Frame Rate, Loop Duration, Horizon Lock
Photo	Ratio, Photo Format, Countdown, Style Border, Horizon Lock

Shooting Parameter Settings

Swipe left from the right edge of the screen to enter the Shooting Parameter Settings.

Available parameters vary depending on the selected shooting mode in 360 or Flat mode. Please refer to the actual on-screen display.

Parameter	Description
Shutter	Controls the duration of light entering the camera, affecting image brightness and sharpness.

Color Mode	Selects the color presentation and post-production flexibility of the video.
ISO	Determines the sensor's sensitivity to light. A higher ISO increases exposure and brightens the image.
EV (Exposure Compensation)	Manually adjusts exposure values when ISO and Shutter Speed are set to Auto, helping to prevent overexposure or underexposure. Higher values result in a brighter image.
White Balance (WB)	Adjusts color reproduction and tone processing to avoid color temperature deviations.
Jitter Blur Reduction	Reduces motion blur and improves image stability when enabled. Anti-Flicker will be disabled, and image brightness may decrease in low-light environments.
Filters*	Applies different color styles to enhance visual expression.
Metering	Selects between Face Metering and Multi-Segment (Global) Metering.
Sharpness	Adjusts the edge contrast of details in photos or videos, making outlines more defined and visually crisper.
Low Light Enhancement	Enhances the image quality of footage captured in low-light scenarios.

**The Filters function is only supported in Flat Mode.*

Note: Adjustable parameters may vary between Standard and Pro modes depending on the selected shooting mode. Please refer to the actual display on your camera.

- 360

Shooting Mode	Parameter Settings	
	Standard	Pro
Video	Color Mode, EV, Jitter Blur Reduction	Color Mode, EV, WB, Shutter, ISO, Sharpness
	Color Mode, WB, Jitter Blur Reduction, Sharpness	
Timelapse	EV, Jitter Blur Reduction	WB, Shutter, ISO, Sharpness
TimeShift	EV, Jitter Blur Reduction	WB, Shutter, ISO, Sharpness
Bullet Time	Color Mode, EV, WB	
Loop Recording	Low Light Enhancement, Color Mode, EV, Jitter Blur Reduction	Low Light Enhancement, Color Mode, EV, WB, Shutter, ISO, Sharpness
Road mode	Low Light Enhancement, Color Mode, EV, Jitter Blur Reduction	Low Light Enhancement, Color Mode, WB, Shutter, ISO, Sharpness, EV
Starlapse	EV, WB, Shutter, ISO, Sharpness	
Interval	EV, WB, Shutter, ISO, Sharpness	
Photo	EV, WB, Shutter, ISO, Sharpness	EV, WB, Shutter, ISO, Sharpness

- Flat Mode

Shooting Mode	Parameter Settings	
	Standard	Pro
Video	Filter, Color Mode, EV, Metering	Filter, Color Mode, EV, WB, Metering, Shutter, ISO, Sharpness
FreeFrame Video	Filter, EV, Metering	Filter, WB, EV, Metering, Shutter, ISO,Sharpness
PureVideo	Filter, Color Mode, EV, WB, Metering	
InstaFrame 2.0	Low Light Enhancement, Beauty, Filter, color Mode, EV, Jitter Blur Reduction	Low Light Enhancement, Beauty, Filter, Color Mode, EV, WB, Sharpness
Loop Recording	Filter, EV, Metering	Filter, EV, WB, Sharpness, Shutter, ISO, Metering
Photo	Filter, EV, Metering	Filter, WB, Metering, Shutter, ISO, Sharpness

Album Page

Swipe right from the left edge of the screen to enter the Album Page to view your captured footage.

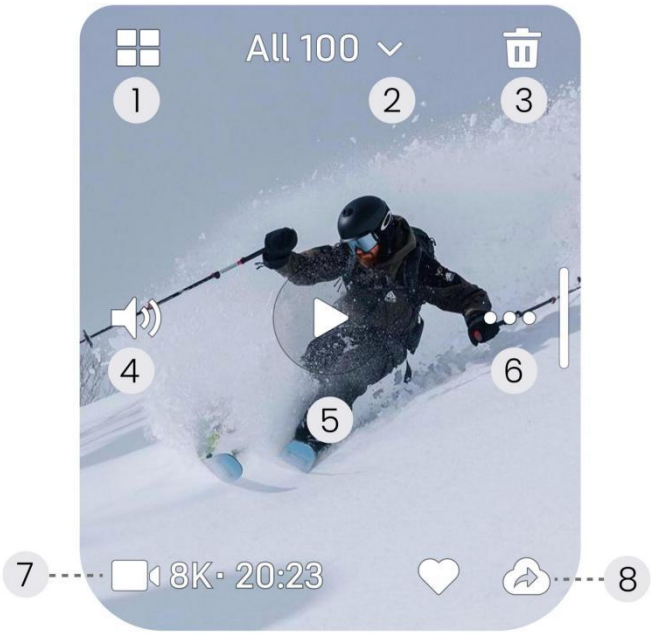

Function Buttons

1. **Gallery**: Displays all captured footage as thumbnails and supports batch operations.
2. **Categories**: Filters videos, photos, or favorites under different storage media.
3. **Delete**: Deletes the currently displayed file. Deleted files cannot be recovered.
4. **Volume**: Adjusts or mutes the audio volume during playback.
5. **Play/Pause**: Footage is paused by default upon entering the Album Page. Tap to play, and tap again to pause.
6. **Favorite**: Tap to favorite the current footage, and tap again to unfavorite.
7. **Duration**: Displays the total duration of the current footage.
8. **Send to Phone**: Transfers the footage to the Insta360 app album or your local phone gallery.

Gestures

1. Swipe up or down on the screen to switch to the previous or next file.

2. Swipe across the progress bar at the bottom to adjust video playback progress.

3. Press and hold the screen during playback for fast-forwarding; release to resume normal speed.

4. Swipe a single finger in any direction during playback to adjust the perspective. *(Note: This feature is only applicable to 360 videos and 360 photos.)*

LED Indicator Status

Category	Status / Operation	LED Color	LED Status
Basic Operations & Standby	Powering on triggered	Cyan	Flashes quickly 3 times, then turns off
	Powering on	Cyan	Solid
	Standby - Idle (Storage card inserted)	Cyan	Solid
	Pre-recording	Cyan	Solid
	Powering off triggered	Cyan	Flashes quickly 5 times, then turns off
	Critically low battery (Cannot power on)	Yellow	Flashes quickly 3 times, then turns off
Type-C Charging	Standby charging	Cyan	Solid
	Fully charged in	Cyan	Solid

	standby mode		
	Charging while powered off	Orange	Solid
	Reverse charging (Powering other devices)	Green	Breathes slowly
	Fully charged while powered off	Green	Solid
	Charging prohibited while powered off	Off	N/A
Tracking & Standby	Preview - Tracking target (Standby)	Green	Solid
	Tracking target lost (Standby)	Yellow	Breathes slowly
Photo & Video	Countdown shooting (Remaining time > 1s)	Cyan	Flashes continuously (Once per second)
	Countdown shooting (Remaining time ≤ 1s)	Cyan	Flashes quickly 5 times, then turns off
	Video - Normal recording	Red	Flashes slowly at a constant rate (Once every 2s)
	Video - Tracking	Green	Flashes slowly at a

	recording		constant rate (Once every 2s)
	Tracking target lost (Recording)	Yellow	Breathes slowly
	Taking photo / Saving photo / Saving video	Off	N/A
Camera Movement Mode	Camera movement with tracking (Recording/Standby)	Green	Flashes quickly continuously (5 times per second)
	Camera movement in standby	Cyan	Flashes quickly continuously (5 times per second)
	Camera movement in normal recording	Red	Flashes quickly continuously (5 times per second)
File Transfer	U-disk file transfer mode	Cyan	Solid
Data Transfer & Quick Reader	Cloud sync / Phone Quick Transfer	Green	Flashes rhythmically
	Connected to Quick Reader successfully (Standby)	Cyan	Solid
	Quick Reader: Backing up data	Green	Flashes rhythmically

	Quick Reader: Insufficient storage / Backup failed	Yellow	Flashes quickly 3 times, then turns off
	Quick Reader: No storage card detected	Yellow	Solid
Alerts & Maintenance	Exception: Battery too low	Yellow	Flashes quickly 3 times, repeating every 5s
	Exception: Charging failure/abnormal	Yellow	Flashes quickly 3 times, repeating every 5s
	Exception: Card full / Card error / USB error	Yellow	Solid
	Exception: No card / High or low temperature alert	Yellow	Solid
	Exception: Card speed insufficient (Recording stopped)	Yellow	Flashes quickly 3 times, then turns off
	Recovery system upgrade / Abnormal recovery mode	Mage nta	Flashes rhythmically
Firmware Update	Firmware update in progress	Blue	Breathes slowly

File Storage

The camera features 64 GB built-in storage (47 GB available storage), and users can also choose to insert a microSD card. To ensure smooth shooting, X6 requires a microSD/TF card that complies with the UHS-I standard (V30 speed class or above), and is formatted as exFAT. Otherwise, recording may be interrupted or files may be corrupted due to insufficient card speed.

Built-in storage read speed: 450 MB/s. Test conditions: Measured in a laboratory environment using the built-in storage with a MacBook Air M2.

Selecting Storage Media

Auto-Detection

1. Insert a microSD card and power on the camera.
2. Once the camera detects the microSD card, a prompt will appear asking whether to switch footage storage to the microSD card.
3. Tap Confirm to switch to the microSD card.

Manual Switch

1. Swipe down to enter the **Shortcut Menu**.
2. Swipe right to enter the leftmost screen (Storage Page) to display the current storage medium.
3. Tap either storage option (Built-in Storage or microSD Card), then tap **Confirm** to complete the switch.

Formatting the Camera Storage Card

It is recommended to regularly transfer camera files to a phone or computer for backup and format the camera storage card to prevent insufficient storage or related exceptions.

The following guides describe how to format the storage card via X6 or the Insta360 app.

Via X6

1. Insert the storage card into X6.

2. Press the Power Button to power on the camera.

3. Swipe down from the top of the screen to enter the Shortcut Menu, then swipe right to enter the leftmost screen. Tap Storage Management and select Format.

Via the Insta360 App

1. Connect X6 to the Insta360 app.

2. Enter the Insta360 app settings page, and go to **Device Settings** > **Camera Storage** > **Format** to format the card.

**Note: If formatting the storage card via a computer, ensure it is formatted to exFAT with the default allocation unit size.*

External Devices

X6 supports a variety of accessories to meet unique shooting needs across different scenarios.

1. **Removable USB Cover**: The USB cover is hot-swappable. Open the cover, then pull it directly and firmly outward to detach it.

2. **Accessory Installation**: Once the USB cover is removed, official accessories such as the Charge Audio Adapter and Quick Reader can be installed.

3. When you have finished using the camera or are using the camera on its own, ensure that the cover is tightly closed and the orange indication mark is completely hidden, so as not to compromise its waterproofing performance.

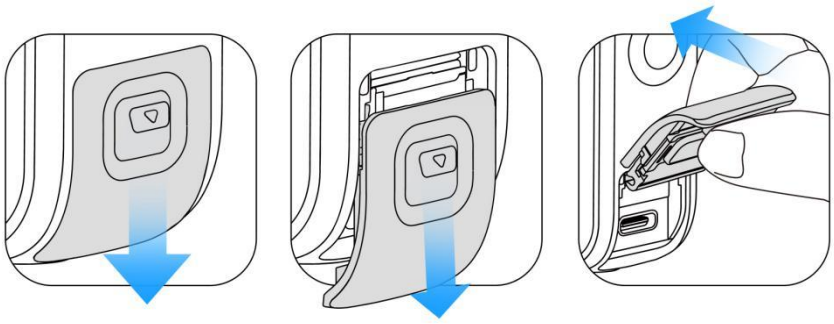

Advanced Use

Special Shooting Modes

InstaFrame 2.0

- **Mode Selection:** Tap the mode icon at the bottom right of the preview page to enter the shooting mode page, then select Flat Mode - InstaFrame 2.0.
- **Specification Settings:**
  - Set flat video resolution and aspect ratio, supporting up to **4K30fps**.
  - Enable **Virtual Gimbal** for smoother, more stable footage.
  - Turn on **360 Video Backup** for post-editing options.
- **FOV & Image Settings:** Adjust the export Field of View (FOV) on the right side of the main interface. **MegaView** is recommended with Distortion Correction enabled.
- **Smart Tracking:** In Gimbal Mode, double-tap the screen to lock onto a subject, and tap once again to stop tracking.
- **Camera Movement:** Tap the left side of the screen to choose a **360 Spin** or **Barrel Roll** to easily capture a cinematic shot.

Virtual Gimbal: Offers a variety of InstaFrame 2.0 options to meet diverse shooting needs, such as daily vlogs, dynamic camera movements, or creative perspectives.

- **Roll Lock:** The frame stays level when tilting left or right, but follows up and down pitch movements. Suitable for shooting daily vlogs.
- **Roll & Tilt Lock:** The frame remains stable regardless of left/right roll or up/down pitch movements. Ideal for push-in/pull-out shots, lateral panning, and orbit shots.
- **FPV:** No motion restrictions. The frame follows movement in any direction. Ideal for experienced creators looking to shoot at custom angles.

Road Mode

- **Select Mode**: Firmly press the Shooting Mode Icon at the bottom right of the preview page, enter the Mode Selection Page, and select "Road Mode".
- **Mode Description:** Once enabled, the camera will simulate a dashboard camera's loop recording. The system saves files in segments based on the set duration and automatically overwrites the earliest video in a continuous loop.
- **Applicable Scenario**: Dashboard recording.
- **Precautions**: It is recommended to use this with car accessories and connect to an external power supply to avoid accidental interruptions.

FreeFrame Video

- **Select Mode:** Firmly press the Shooting Mode Icon at the bottom right of the preview page, enter the Mode Selection Page, and select "FreeFrame Video".
- **Mode Description**: Utilizes full-sensor pixel recording. Footage can be cropped losslessly into any aspect ratio, such as 16:9, 9:16, or 1:1, during post-editing in the client app/Studio, without affecting image quality or stabilization. However, stabilization processing must be applied manually in the client software.
- **Applicable Scenario**: For those who wish to quickly share video across multiple (different) social media platforms.

360 AI Photo

- **Select Mode:** Firmly press the Shooting Mode Icon at thhe bottom right of the preview page, enter the Mode Selection Page, and select Photo under "360 Mode".
- **Mode Description**: Press the Shutter Button to capture a 360 photo, capturing the entire 360 space instantly. Upon completion, the built-in AI immediately picks the best composition and perspective direction, which can be exported to your phone's system gallery with a single tap for quick

sharing.

- **Applicable Scenario**: Rapid 360 content sharing.

Smart Features & System Settings

AI Director

AI Director is an intelligent auto-editing feature built into the camera. Once enabled, the camera utilizes local algorithms to automatically identify and filter the highlight moments within the captured footage, selecting the best combination of shots and editing them together. Once finished, you can open the Insta360 app and check the "Memories" tab to view your generated exclusive video.

- **Enable Feature:** Swipe down on the screen to enter the Shortcut Menu, then tap the "AI Director" icon. After powering off and connecting to a power supply, it will automatically identify recent highlight moments, speeding up subsequent editing and processing tasks within the App. While charging, the camera edits recent footage, generates exclusive videos, and pushes them to the mobile App.

- **Core Analysis Modes:** You can freely choose between two analysis modes in the "AI Director" settings menu based on your needs:

  a. **Endurance Priority Mode**: The camera will primarily utilize idle processing power in the background to analyze and extract highlight moments from videos when it is powered off and charging. Suitable for high-intensity outdoor continuous shooting, multi-day high-frequency creation, or scenarios where power replenishment is tight. This mode ensures the camera maintains optimal battery runtime and a lower body temperature when powered on for composition and recording.

  b. **Efficiency Priority Mode**: The camera simultaneously performs highlight moment identification and intelligent analysis during video recording as well as when powered off and charging. Suitable for users who wish to quickly output and instantly share content (e.g., needing to post or deliver footage immediately after a day of shooting). This mode allows you to view the finished videos earlier and faster in the App, but

it will have a minor impact on the camera's battery life and body heat dissipation.

- **Privacy and Data Security Note**: All highlight moment identification and composition analysis by "AI Director" are completed locally on the camera body or the mobile client, without relying on cloud computing power. Raw footage, audio, and biological characteristics data such as faces are strictly never uploaded, comprehensively safeguarding your content and privacy security.
- **Tip**: Once this feature is enabled, the camera starts identifying videos as soon as the battery charges to 80%, generating extra power consumption. The overall charging time will be prolonged, so it is recommended that users reserve sufficient charging time.

Suggested Timelapse Parameters

- **Traffic/Crowds**: Interval 1s - 2s, Adaptive Shutter, showcasing smooth motion blur.
- **Sunrise/Sunset**: Interval 3s - 5s, enable balanced exposure for natural lighting transitions.
- **Rolling Clouds**: Interval 10s, record continuously for at least 30 minutes.
- **Day-to-Night Transitions**: Interval 30s, record continuously for at least 1 hour.
- **Blooming Flowers**: Set interval from 5s to 60s depending on the flower species, record continuously from 2 hours up to several days.
- **Starry Skies/Milky Way**: Interval 15s - 30s, manual shutter set to 10s - 20s, ISO 800 - 1600.

Audio Modes

The camera captures audio via built-in microphones, allowing users to select different audio modes based on the shooting environment:

- **Auto Wind Noise Reduction**: Automatically identifies and powerfully filters ambient wind noise while maintaining a natural balance of background ambient sound. **Suitable scenarios:** High wind-noise

environments such as outdoor cycling, skiing, outdoor hiking, and street travel photography.

- **Vocal Enhancement**: Intelligently reduces background noise within human speech to make vocals clearer and purer. **Suitable scenarios**: Vlog recording, talking-head commentaries.
- **Stereo:** No wind noise reduction processing is applied, delivering a more natural audio effect that highly reproduces the actual scene. **Suitable scenarios**: Capturing live concerts, musical performances, stage shows, and natural environment audio (such as birdsong, streams).
- **360 Audio**: Captures audio from all directions, providing a more authentic sense of space. Suitable scenarios: Life recording scenarios with immersive VR perspectives, or multiple people gathered around a party.

To enhance the sense of presence, the camera supports automatically matching appropriate a sound profile based on the environment:

- **Intelligent Audio Mode**: Automatically provides corresponding sound profiles based on the current environment. Suitable for: Vlogs, travel, outdoor hiking, concerts, and other vocal or music scenes. Users can achieve a clear, balanced listening experience without manually adjusting complex audio parameters.
- **Engine Sound Enhancement**: Enhances motorcycle engine sounds to make them more prominent and aggressive, restoring a true sense of presence. Suitable for: Motorcycling.
- Note: Once "Intelligent Audio Mode" is enabled, the algorithm will autonomously select and apply the appropriate audio algorithm based on the scene.

Image Color & Dolby Vision Description

This camera supports Ultra High Dynamic Range (UHDR) photo capture and Dolby Vision video processing. The relevant display and export standards are as follows:

- **P3 Wide Color Gamut & UHDR Photos**: Base photos captured by the camera (including single wide-angle and 360 modes) are stored using P3

wide color gamut and UHDR technology.

  - Display Requirements: To achieve accurate color and highlight/shadow dynamic range rendering, it is recommended to use devices supporting a wide color gamut for playback or editing (such as iPhone 6s and subsequent models, mainstream Android flagships released after late 2015, MacBooks after 2016, and Windows 11 systems with Auto Color Management enabled).

- **Multi-Material Mixed Editing:**
  - In-Camera and App Editing: When multi-segment mixed editing is performed within the Insta360 app or Studio using P3 photos together with regular SDR video or Dolby Vision video, the system will automatically map and align the color spaces.
  - Export Standards: To preserve high dynamic range visuals, please select wide color gamut video or Dolby Vision video formats when exporting. If exported as a regular video, the system will convert it into the standard BT.709 format to ensure normal playback compatibility on traditional devices.

Sharing Footage

- **Via Quick Transfer**: Primarily for iOS users. Instantly transfers camera footage to the mobile app via high-speed Wi-Fi channels.
- **Via Mutual Share**: Primarily for Android users. Supports data-free, lossless, and high-speed sharing of raw footage directly to the phone's system gallery.

File Transfer & Footage Management

Connecting to the App and Transferring Files

Manual Connection

1. Power on the camera and enable Bluetooth on your phone.
2. Open the Insta360 app to complete the connection to X6.

NFC Connection

To enable rapid interconnection between the camera and your phone, Insta360 X6 supports NFC touch connection:

1. Enable both Wi-Fi and Bluetooth on your phone. For Android phones, please enable NFC in the status bar or device settings.
2. Bring your phone's NFC detection area close to the NFC sensing zone on the lower half of the camera touchscreen. This will quickly wake the camera, launch the Insta360 app, and complete the connection. The system will automatically jump to the Album page.

Transferring Files

1. Enter the App Album page.
2. Tap the "Multi-Select" icon in the upper right corner and choose the footage you wish to transfer.
    - Tap the export icon at the bottom to save the footage to your phone's local gallery. Do not exit the App or lock your phone screen during the export process.
    - Tap the download icon at the bottom to download the footage into the App album.

**Notes:*

- *The position of the NFC sensor chip varies depending on the smartphone brand and model. Please locate the specific sensing area based on your actual phone model.*
- *NFC compatibility and connection experience depend on your phone's hardware support.*
- *Tip for Apple (iOS) Users: If the touch connection fails, try tilting the phone slightly upright while pressing it against the camera's sensing zone for a more reliable connection.*

Connecting to Studio and Transferring Files

- **U-Disk Transfer Mode**: Power on the camera and connect it to your computer using the official Type-C cable. Select **"File Transfer" (U-Disk Mode)** from the pop-up prompt on the camera touchscreen. The computer will recognize the camera as a removable storage device. You can then copy the raw footage in **.insv** (360 video) or **.insp** (360 photo) format directly to your local computer drive.
- **High-Speed Card Reader Transfer**: For a high-speed transfer experience (especially when handling ultra-large 8K files), it is recommended to power off the camera, remove the microSD card, and insert it into a high-speed card reader connected to a USB 3.0 or Thunderbolt port on your computer.

Subscribing to Insta360+ Cloud Services

- **Cloud Storage Auto-Backup**: When the camera is connected to a Wi-Fi access point with internet connectivity and is in an idle charging state, the cloud synchronization feature can be enabled. The camera will automatically and securely sync un-uploaded low-bitrate proxy files or high-definition raw footage (requires subscription package purchase) to your Insta360 Cloud space.
- **App Cloud Rendering & Transcoding**: When handling extremely complex special effects or long videos on mobile devices, you can choose

to upload the editing project to cloud servers for distributed rendering. Once rendering is complete, the finished product can be downloaded directly to your phone, drastically reducing the operating load and heat generation of local mobile hardware.

Troubleshooting

What should I do if the camera cannot connect to the Insta360 app? Check the following items:

1. Ensure both the camera firmware and the App are updated to the latest versions, and that the Insta360 app has been granted Network, Bluetooth, and Local Network permissions.
2. Go to your phone's system settings page to verify if the camera's Wi-Fi is connected.
    - If not connected, enter the Wi-Fi password, restart both the camera and phone, and try again.
    - If the connection still fails, go to your phone's Wi-Fi settings, select the camera's Wi-Fi network, forget this network, and try reconnecting.
3. Confirm that the Insta360 app has been granted Location (GPS) and Bluetooth permissions in your phone's system settings (this setting is not required for iOS devices).
    - For Android users, ensure that options like WLAN+ or Auto-Switch Wi-Fi are turned off (if available in your system settings).
    - For iOS users, go to the phone's system settings, locate Insta360, and verify that Local Network permission is enabled.
4. Place X6 closer to your phone.

Footage Editing

You can view and edit your 360 or flat footage via the Insta360 app (mobile) or Insta360 Studio (computer). For details, please click here to watch the tutorial videos.

Maintenance & Care

Checking Camera Serial Number

1. Check via Product Packaging Box

The camera serial number can be viewed on the back of the packaging box.

2. Check via Camera Settings Page

（1）Press the Power Button to turn on the camera;

（2）Swipe down to enter the Shortcut Menu, and go to Settings > About Camera to view the camera serial number.

3. Check via Insta360 App

（1）Connect the camera to the Insta360 app;

（2）Enter the Insta360 app settings page and tap "Device Info" to view the camera serial number.

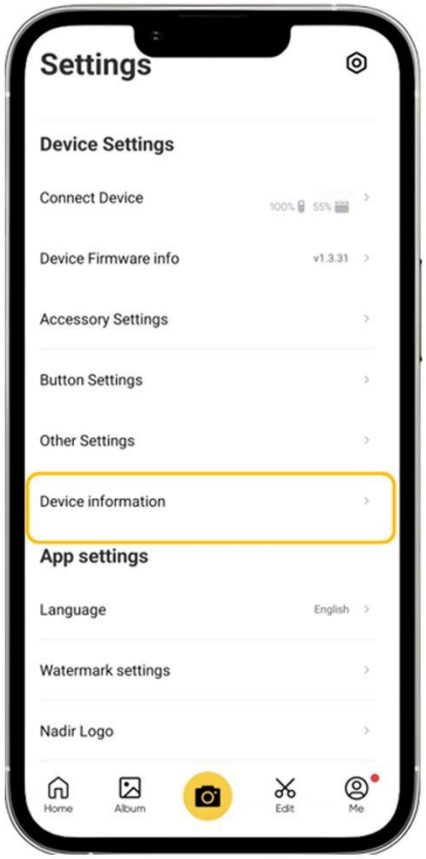

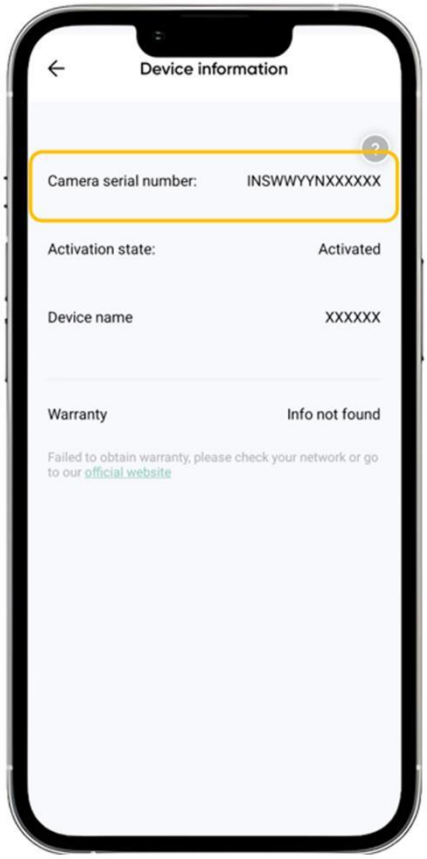

4. Check via Insta360 Studio

（1）Open Insta360 Studio on your computer and import the raw footage;

（2）Select the raw footage and open the file properties window in the right menu bar to view the camera serial number.

5. **Check via Camera Body Battery Compartment Sticker**

After removing the battery, the camera serial number can be viewed directly beneath the barcode on the battery compartment sticker.

Lens Element Replacement Guide

When the camera lens element develops scratches due to bumps, you can replace the lens element yourself using the official repair kit.

- Scope of Application: This kit is intended solely for replacing scratched lens elements.
- Scenarios where self-replacement is not recommended: If you encounter a cracked lens, a deformed/worn lens retaining ring, or severe camera damage, do not operate it yourself. It is recommended to contact official after-sales service for repairs.

Preparation & Environmental Requirements

- Dust-free and Dry Environment: It is recommended to operate in a dust-free, dry room with humidity below 60% (air conditioning dehumidification can be enabled if humidity is too high) to prevent dust from entering the interior of the lens or causing fogging.
- Operating Platform: Hold the camera by hand, or place the camera on

a flat surface padded with a lens cleaning cloth.

- Confirm Kit Tools: Ensure that the kit includes the new lens element, lens assembly tool (with suction cup), prying tool, lens storage box, and cleaning tools (air blower, brush, wet wipes, lens cloth, disposable gloves).

Removing the Old Lens Element

1. Wear Gloves: Put on disposable gloves to prevent hand grease from contaminating optical components.
2. Remove the Retaining Ring: Align the lens assembly tool with the patterns on the lens retaining ring, rotate counterclockwise by approximately 30, and remove the retaining ring along with the tool.
3. Pry Up the Old Lens Element: Align the prying tool with the edge of the old lens element and gently pry it up to remove the old lens element.

Cleaning & Installing the New Lens Element

1. Inspect and Clean Inner Lens (Optional): Inspect the surface of the camera's inner lens. If dust or stains are present, clean them with the air blower first, then use the brush to sweep away stains. Wipe with cleaning wet wipes if necessary and dry with a lens cloth.
2. Insert New Lens Element: Take the new lens element out of the storage box, align it with the inner lens, and fit it into the camera body (Note: Do not remove the suction cup from the lens element just yet).
3. Install the Retaining Ring:
    - Use the assembly tool to align the lens retaining ring with the camera body, ensuring it sits flush with the body.
    - Tighten it by rotating clockwise by approximately 30, then remove the suction cup to complete installation.
    - Keep the camera body horizontal and rotate slowly when turning. Do not press down hard on the assembly tool to avoid cross-threading or installing the retaining ring crookedly. If it is crooked, slowly unscrew it and reinstall. Furthermore, do not mix up the front and rear lens retaining rings of the camera body.

Stitching Calibration

Stitching calibration must be performed after replacing the lens element to ensure the 360 image stitches seamlessly:

1. Select Environment: Head to an outdoor environment with good lighting, open space, and no obstructions. Ensure there are tall reference objects such as trees or buildings outside a 10-meter radius of the camera.

2. Remove Accessories: Be sure to remove all external optical accessories such as lens guards and dive cases before calibration.

3. Turn on Calibration: Power on the camera, swipe down to enter the menu, and select Settings > Stitching Calibration in sequence.

4. Calibration Operation: Hold the camera, keeping one lens facing straight up and the other lens facing straight down. Extend your arm fully and keep your body horizontally still (do not move during the shooting process).

5. Complete Inspection: Wait for the camera to automatically shoot and finish the stitching calibration check. Once the screen pops up a prompt stating "Calibration successful" or "No calibration required", tap confirm to use the camera normally.

For specific replacement steps and diagrams of the replaceable lens element, please refer to the instructions included with the lens element kit.

Lens Guard Installation & User Guide

Selecting a Lens Guard

You can differentiate and choose the appropriate lens guard based on your shooting scenario via the color markings on the grooves (the installation method for both lens guards is completely identical):

- Standard Lens Guard (Blue Marking)
- Premium Lens Guard (Orange Marking).

Installation & Detachment

- Installation Preparation: Carefully clean the camera lenses, as well as the inner and outer surfaces of the lens guards, using the dedicated lens cloth to prevent dust and stains from affecting image quality.
- Installation Steps: Hold the handles on both sides of the lens guard with your hand, and align the 3 notches on the inner side of the lens guard with the 3 cutouts on the camera lens decorative ring. Align the blue mark on the lens guard with the upper left corner of the lens, then rotate clockwise to tighten until the blue mark turns straight to the top. Install the lens guard on the other side in the same manner.
- Detachment Steps: Hold both sides of the lens guard with your hand and rotate counterclockwise to easily detach it.

Switching Lens Guard Mode

When the double-sided lens guards are installed, a confirmation prompt will pop up on the camera screen. After tapping confirm, the corresponding lens guard type icon will be displayed in the screen status bar, indicating that the camera has successfully switched to the corresponding stitching mode.

Precautions

- Anti-Fog & Waterproofing: Both lens guards are non-sealed structures; please do not use them in water-related scenarios such as surfing, swimming, or rainy days to avoid fogging inside the lens elements. If fogging accidentally occurs during use, remove and dry them before reinstalling.
- Magnetic Safety: The interior of the lens guards contains magnetic substances; please keep them away from medical devices easily disrupted by magnets, such as pacemakers.

Safety & Waterproofing Instructions

Disclaimer

Using this product implies agreement with this statement. Please check the product carefully before each use, do not use if damaged. Except for product quality issues certified by law, users shall assume all liabilities arising from their usage behaviors and consequences. Within the scope of national laws and regulations, Insta360 reserves the right to interpret and modify this statement.

Waterproofing Instructions

1. X6 is waterproof down to 20 meters and can be used in water depths up to 20 meters for a short period of time.

2. To ensure waterproofing efficacy, check before use to ensure that the rubber rings on the camera battery and USB protective cover are undamaged, clean, and free of foreign matter, and snap the battery and USB protective cover completely tight.

3. Do not use a hair dryer to blow into the camera microphones and speaker to avoid damaging the internal waterproof membranes.

4. Avoid rapid water entry by the camera, as instantaneous impact force may cause water ingestion by the camera. To guarantee optimal waterproofing efficacy, it is recommended to use the camera with the official Insta360 Invisible Dive Case in scenarios with excessive water stream impact, such as diving and surfing (please refer to the dive case instructions for details).

5. After the camera is used in seawater, rinse the surface of the camera clean with fresh water, soak it in fresh water for 5 to 10 minutes, then wipe it dry with a soft cloth and allow it to dry naturally in a well-ventilated area.

6. After the camera gets wet or is used underwater, the noise reduction efficacy of the built-in microphone windproof cover and the microphone sound reception will be affected, which is a normal phenomenon. After getting wet, it will gradually recover after being left to dry for 6 to 8 hours; after being used underwater, it needs to be left to dry for at least 24 hours.

7. After the camera is used underwater or when there is water on its surface, please dry it before performing operations such as removing the battery, charging, or transferring files.

8. Never use the camera in high temperatures (>40℃), corrosive liquids, or unknown liquids.

Usage Safety

1. This product contains magnets; please keep it away from easily disrupted equipment such as pacemakers.

2. Do not use the camera during thunderstorms.

3. When using the camera, please avoid sudden changes in temperature or humidity, otherwise condensation may be triggered on the surface or inside of the camera.

4. Please ensure that the camera's built-in microphone windproof cover is free of dust and blockages by foreign matter, otherwise the noise reduction efficacy may be affected. If foreign matter is present, you can clean it using a small brush or rag, or rinse it with fresh water and allow it to dry naturally.

5. Do not use any corrosive liquid with cleaning properties to clean the camera; cleaning with a soft dry cloth is recommended.

6. Store the camera in a dry environment to prevent the camera from fogging.

7. In high-intensity sports scenarios or violent vibration environments, please use the 1/4" threaded interface at the bottom of the camera instead of the magnetic quick-release interface to mount accessories, so as to prevent the camera from accidentally falling and causing damage.

8. Do not disassemble or repair the camera and battery yourself.

Battery Safety

1. Immediately after shooting ends, the camera battery temperature is relatively high. Wait for the battery to drop to room temperature before charging.

2. If the battery is exposed to water, it can no longer be used. Please discard it after drying. The use of bulging, damaged, or leaking batteries is prohibited. Please understand and abide by local regulations regarding

battery recycling to properly discard the batteries contained in this product.

3. Never place the battery near heat sources or in extremely high-temperature environments, such as stoves, heaters, or inside a car on hot summer days.

4. The use of batteries and charging equipment not officially provided by Insta360 is prohibited.

5. Storing or transporting the battery together with metal objects such as watches, keys, and jewelry is prohibited.

6. If the camera is not used for a long time (8 months), the camera battery power may be depleted. Please charge it in a timely manner to avoid affecting usage.

7. Replacing the battery with an incorrect model may cause safety protections to fail, posing risks of explosion, fire, etc.

8. Do not disassemble, strike, squeeze, or cut the battery. It is strictly prohibited to touch or pry the battery using sharp objects, screwdrivers, etc., as the above operations may lead to an explosion.

9. Do not place the battery in an extremely low air-pressure environment, otherwise it may cause a battery explosion or leakage of flammable liquids and gases.

10. If the battery exhibits severe swelling, discard immediately. Do not continue to use it.

Specifications

For more specification information, please visit the website at:
https://www.insta360.com/specs/x6