DJI Dock 4 User Manual

v1.0 2026.10

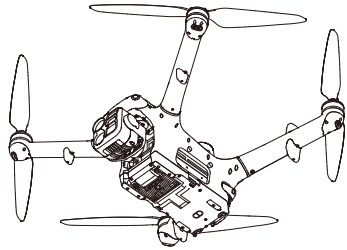

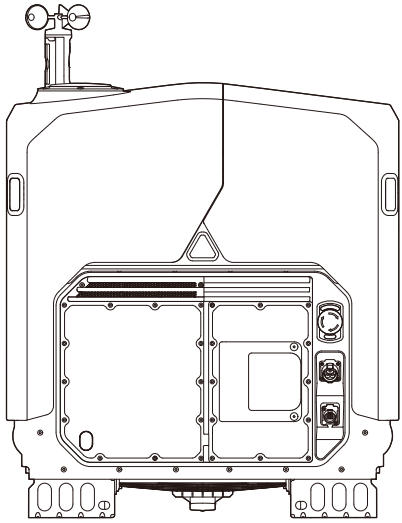

The copyright and ownership of this manual belong to SZ DJI Technology Co., Ltd. and its affiliates (collectively, “DJI”). Without DJI's written authorization, no person or entity may use all or part of this manual for themselves or others by any means, including copying, scanning and storing, distributing, reprinting, selling, transferring, or altering its content. This manual and its content are intended solely for operating and using this product and must not be used for other purposes.

Searching for Keywords

Use the search function in the PDF document to find keywords. For example, in Adobe Reader, press Ctrl+F on Windows or Command+F on Mac to search for keywords.

Navigating to a Topic

View a complete list of topics in the table of contents. Click on a topic to navigate to that section.

Printing this Document

This document supports high resolution printing.

 © 2026 DJI All Rights Reserved.

Using this Manual

- The operating temperature of this product is -40°C to 50°C and, under electronic component temperature classifications, it does not meet military-grade requirements (-55°C to 125°C), which demand greater environmental tolerance. Operate the aircraft appropriately in environments suitable for the intended use.

This document was developed following the process, content and structure defined in ASTM Specification F2908.

Legend

Important | Hints and Tips | Reference

Read Before Use

DJI™ provides users with tutorial videos and the following documents:

1. *Safety Guidelines*
2. *Quick Installation Guide*
3. *Installation and Setup Manual*
4. *User Manual*

First, watch the tutorial videos and read the Safety Guidelines to learn about product safety and operation; then use the Quick Installation Guide to learn how to install the product. For more information on using the product, refer to the Installation and Setup Manual and User Manual.

Installation must be performed by a DJI-authorized service provider. Installing the product yourself may pose safety risks. Contact DJI Support for information on authorized service providers.

Video Tutorials

Click the link below or scan the QR code to watch the tutorial videos and ensure correct, safe use of this product.

© 2026 DJI All Rights Reserved.

https://enterprise.dji.com/dock-4/video

Download DJI Enterprise App

Scan the QR code to access the download link.

- To check the operating system versions supported by the app, visit https://www.dji.com/downloads/djiapp/dji-enterprise.
- The interface and functions of the app may vary as the software version is updated. Actual user experience is based on the software version used.

Download DJI Assistant 2

Download DJI ASSISTANT™ 2 (Enterprise Series) from the address below:

https://www.dji.com/downloads/softwares/assistant-dji-2-for-matrice

 © 2026 DJI All Rights Reserved.

Contents

Using this Manual **3**
- Legend 3
- Read Before Use 3
- Video Tutorials 3
- Download DJI Enterprise App 4
- Download DJI Assistant 2 4

1 General Information and System Description **9**
- 1.1 System Components 9
- 1.2 Aircraft 10
  - Aircraft Lights 11
  - Camera 12
    - Storing Photos and Videos 13
  - Gimbal Notice 13
  - Flight Control Surfaces 14
  - Propulsion System 14
    - Replacing Propellers 15
    - Notice 16
  - Avionics 17
    - Flight Control and Navigation System 17
    - Communications Equipment 17
    - Aircraft RTK 17
  - Safety System 18
    - Sensing System 18
    - Vision Assist 21
    - DJI AirSense 22
  - IP Rating of the Aircraft 23
- 1.3 Dock 24
  - Dock Status Indicator and Buzzer Alerts 25
  - Electrical Cabinet Panel 26
    - Electrical Cabinet Indicators 27
  - Dock Cover 28
    - Opening and Closing the Dock Cover 28
  - Landing Pad 30
  - Battery Compartments and Battery Swapping Module 30
  - Air Conditioning System 31
  - Dock Environment Sensors 31
  - Dock Network Connection 32
    - Data Consumption 32

© 2026 DJI All Rights Reserved.

IP Rating of the Dock 33
1.4 DJI O4 Ground Station 33
Parts of the Product 33
Mode Indicator 34
Power Indicator 34
WAN/LAN Port Indicators 35
Operating Mode 36
1.5 DJI Enterprise App 37
1.6 DJI FlightHub 2 37
1.7 Command and Control Link (C2 Link) 37

2 Performance and Limitations 38

2.1 Specifications 38
2.2 Legal Requirements and Flight Precautions 38
2.3 Center of Gravity Limitations 39

3 Normal Procedures 40

3.1 Airspace and Radio Frequency Environment Requirements 40
3.2 Flight Restrictions 41
GEO (Geospatial Environment Online) System 41
GEO Zones 41
Buffer Zone 42
Custom Flight Area 43
Unlocking GEO Zones 44
Flight Altitude and Distance Limits 44
3.3 Use of Takeoff and Landing Equipment 45
3.4 Distance to the control station 45
3.5 Entry/Exit Route 46
3.6 Pre-Flight Checklist 46
3.7 Flight Operations 48
Flight Procedure 48
Takeoff 48
Planned and Manual Flight 49
Flight Route Tasks 49
Live Flight Controls 52
3.8 Return to Home 53
Notice 54
Advanced RTH 55
Trigger Method 56
RTH Procedure 57
RTH Settings 59
Dock Landing Detection 62

 © 2026 DJI All Rights Reserved.

3.9 System Shutdown 62
3.10 Post-Flight Check 63
3.11 Image Transfer and Export 63

4 Emergency Procedures 64

4.1 Fire 64
4.2 Loss of C2 Link 64
4.3 Loss of Navigation Systems 65
4.4 Control Station Failures 65
Loss of Control Signal 65
DJI FlightHub 2 Failure 65
Alternate Landing 65
Emergency Stop Button 66
Other Failures 66
4.5 Flyaway 67

5 Handling, Servicing and Instructions for Maintenance 68

5.1 Storage 68
Dock Storage 68
Aircraft Storage 68
Battery Storage 68
5.2 Intelligent Flight Battery 69
Notice 69
Inserting/Removing the Battery 70
Aircraft Battery Swapping and Charging 70
Checking the Battery Level 71
Checking the Battery Level via DJI FlightHub 2 72
Dock Warming 72
Conditioning Batteries 72
5.3 Cleaning and Maintenance 73

6 Accessories 74

6.1 Accessories and Aircraft Endurance 74
6.2 DJI AL2D Spotlight and DJI AS2D Speaker 75
6.3 DJI AP1 Parachute 78
Disclaimer 78
Component Introduction 79
First Use 80
Installation 80
Using the Parachute 81
Post-Deployment Procedures 83
Regular Inspection 84

© 2026 DJI All Rights Reserved.

7 Appendix 85
7.1 Firmware Update 85
Using DJI FlightHub 2 85
Upgrading with DJI Assistant 2 (Enterprise Series) 86
Notices 86
7.2 Expansion Port 87
Installation Requirements 87
Third-Party Payload Requirements 87
7.3 Using Enhanced Transmission 89
SIM Card Installation and Enhanced Transmission Settings 89
Using Enhanced Transmission 91
Security Strategy 91
4G Network Requirements 91
7.4 Troubleshooting Procedures 92
7.5 Risks and Warnings 93
7.6 Disposal 93
7.7 C5 and C6 Certification 93
Direct Remote ID 95
Geo Caging 96
Introduction 96
Using Geocaging (DJI FlightHub 2) 97
Display Warnings and Information 99
Braking Distance in CV 99
Flight Termination System (FTS) 101
EASA Notice 101
Original Instructions 102
7.8 FAR Remote ID Compliance Information 102
7.9 Frequently Asked Questions and Solutions 102
7.10 After-sales Service 103
Warranty Policy 103
Handling Procedures for Flight Accident 103
Flyaway Accident 103
Collision or Crash Accident 103
Shipping the Product for Repair 104

 © 2026 DJI All Rights Reserved.

1 General Information and System Description

1.1 System Components

The DJI Dock 4 system consists of the DJI Matrice 5TD aircraft, DJI Dock 4, DJI O4 Ground Station, DJI Enterprise App, and DJI FlightHub 2.

The system components and the role and functions of each device are shown below.

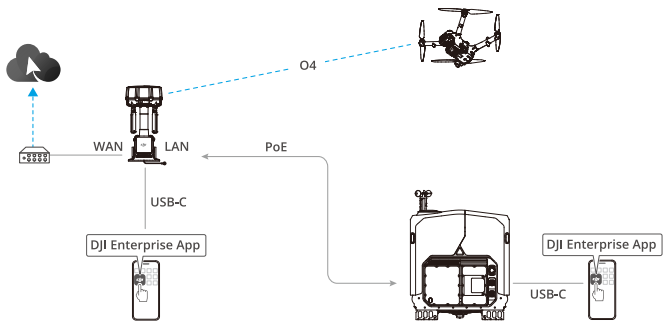

Device/Platform	Role	Function
DJI Enterprise App	Deployment Tool	• Used for device deployment, activation, and linking.
Dock	Takeoff/Landing Hangar	• Used for aircraft takeoff, landing, and storage, and for swapping and charging aircraft batteries. • Automatically collects media files and uploads them to DJI FlightHub 2.
Ground Station	Communication Gateway	• Integrates video transmission and RTK modules to provide a video transmission connection and RTK base station data for the aircraft.
Aircraft	Operation Terminal	• Performs flight tasks and collects image data.
DJI FlightHub 2 or a third-party cloud platform	Cloud Management Platform	• Distributes and manages tasks, remotely controls devices, and monitors operations. • Manages linked devices and media files.

© 2026 DJI All Rights Reserved.

- The product must be installed and deployed before use. Refer to the Installation and Setup Manual for details.
- For instructions on using the ground station, refer to the DJI O4 Ground Station User Manual.

1.2 Aircraft

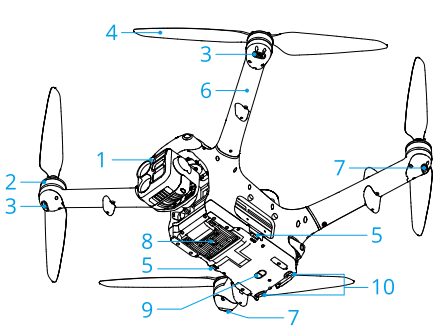

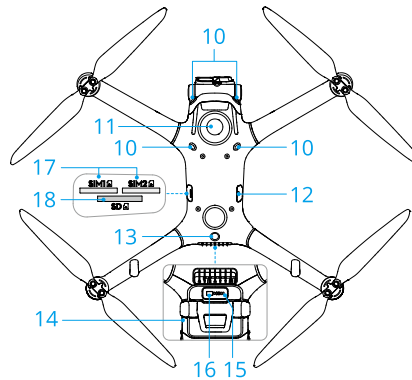

1. Integrated Gimbal Camera
2. Motor
3. Front LEDs
4. Propellers
5. E-Port V3 Low-Speed Port
6. Frame Arm (including Internal Antennas)
7. Aircraft Status Indicators
8. Custom Warning Light / Auxiliary Light
9. Three-Dimensional Infrared Ranging Sensor
10. Vision System
11. LiDAR
12. USB-C Assistant Port (E-Port V3 High-Speed Port)
13. Beacon
14. Intelligent Flight Battery
15. Battery Level LEDs
16. Power Button

    Power on/off: Press once, then press and hold for 2 seconds.
17. SIM Card Slot
18. microSD Card Slot

DO NOT disassemble factory-installed components yourself, except those permitted in this manual; otherwise, the product will not be covered under warranty.

 © 2026 DJI All Rights Reserved.

Aircraft Lights

Aircraft Status Indicators

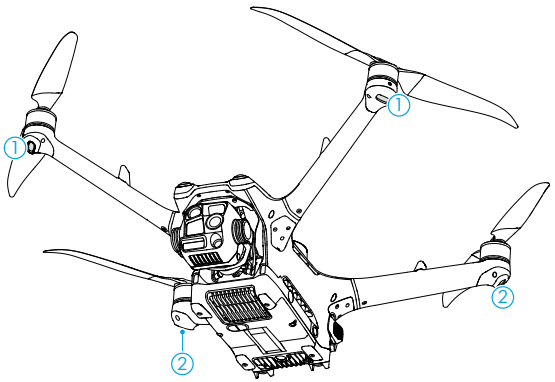

1. **Front LEDs**

   Used to indicate the orientation of the aircraft. When the aircraft is powered on but the motors are not running, the front LEDs glow solid red.

2. **Aircraft Status Indicators**

   Indicate the current aircraft status when the motors are not running.

·····	Blinks red, yellow, and green alternately	Auto System Check
× 4 ·····	Blinks yellow four times	Warming up
·····	Blinks green slowly	Using Satellite Positioning
× 2 ·····	Blinks green twice	Using Vision Positioning
·····	Blinks yellow slowly	No Satellite or Vision Positioning (ATTI Mode)
Warning States		
·····	Blinks yellow quickly	Control Signal Lost
·····	Blinks red slowly	Takeoff failure errors, such as low battery warning [1]
·····	Blinks red quickly	Critical Battery Warning
—	Solid red	Critical error
·····	Blinks red and yellow alternately	Compass Data Error; Calibration Required

© 2026 DJI All Rights Reserved.

After the aircraft motors start, the indicators follow fixed blinking patterns: the front LEDs blink red and green alternately, and the aircraft status indicators blink green.

[1] If the aircraft cannot take off while the status indicators are blinking red slowly, view the specific warnings in DJI FlightHub 2.

- Lighting requirements vary depending on the region. Observe local laws and regulations.

Custom Warning Light

A custom warning light is integrated into the bottom of the aircraft. It can be enabled in the virtual cockpit of DJI FlightHub 2 with the color and blinking pattern selectable as needed.

Beacon

The beacon on the aircraft enables you to find the aircraft when flying at night. The beacon can be manually turned on or off in DJI FlightHub 2.

DO NOT look directly at the beacons when they are in use to avoid damaging your eyes.

Camera

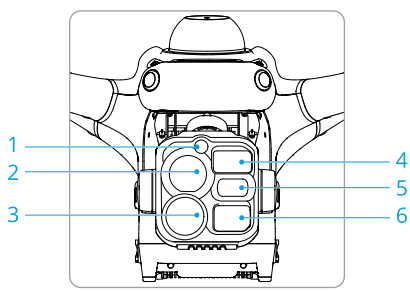

1. NIR Auxiliary Light
2. Tele camera
3. Thermal Camera
4. Laser Range Finder
5. Medium Tele Camera
6. Wide-Angle Camera

- Due to the characteristics of the infrared sensor, the infrared sensor may become burnt before sunburn protection is triggered. DO NOT expose the infrared camera lenses to strong sources of energy such as the sun, lava, or

 © 2026 DJI All Rights Reserved.

a laser beam. Otherwise, the camera sensor may become burnt leading to permanent damage.

- Use a lens cleaner to clean the lens to avoid damage or poor image quality.
- Make sure the camera is not covered or obstructed, as high temperatures may damage it or even cause burns.

Storing Photos and Videos

The aircraft is equipped with a microSD card slot for installing a microSD card to store photos and videos. Refer to the recommended microSD card list in the Specifications to select an appropriate card.

- Ensure that the microSD card slot and the microSD card are clean and free of foreign objects during use.
- DO NOT insert or remove the microSD card while shooting. Inserting or removing the card while shooting, or removing the battery while the aircraft is powered on, may damage the card and cause loss of stored data.
- Before shooting important photos or videos, shoot a few images to test whether the camera is operating correctly.

Gimbal Notice

- Make sure there are no stickers or objects on the gimbal before taking off.
- Keep the gimbal clean and prevent contact with sand, gravel, or other foreign objects, as these may obstruct movement and affect performance.
- DO NOT add any extra payload other than an official accessory to the gimbal, as this may cause the gimbal to function abnormally or even lead to permanent motor damage.
- Precision elements in the gimbal may be damaged by a collision or impact, which may cause the gimbal to function abnormally. Make sure to protect the gimbal from damage.
- Excessive external force on the gimbal, such as impacts or forcible movement, may cause the gimbal motors to enter protection mode.
- Flying in heavy fog or clouds may make the gimbal wet, leading to temporary failure. The gimbal will recover full functionality once it is dry.
- When the aircraft is stationary on the ground and the camera zoom ratio is below 11x, the gimbal uses mechanical stabilization. Due to the accuracy limits

© 2026 DJI All Rights Reserved.

of the gimbal sensors, the view may shift slightly. When the aircraft compass is calibrated, image shifts caused by gimbal drift within ±0.8° are normal.

* When the zoom ratio of the visible-light camera reaches 11x, MEE image stabilization is enabled. The higher the zoom ratio, the greater the stabilization margin and the better the image stabilization performance.

Flight Control Surfaces

Not applicable for multicopters.

Propulsion System

The propulsion system consists of motors, ESCs, and folding propellers, to provide stable and powerful thrust.

 © 2026 DJI All Rights Reserved.

Replacing Propellers

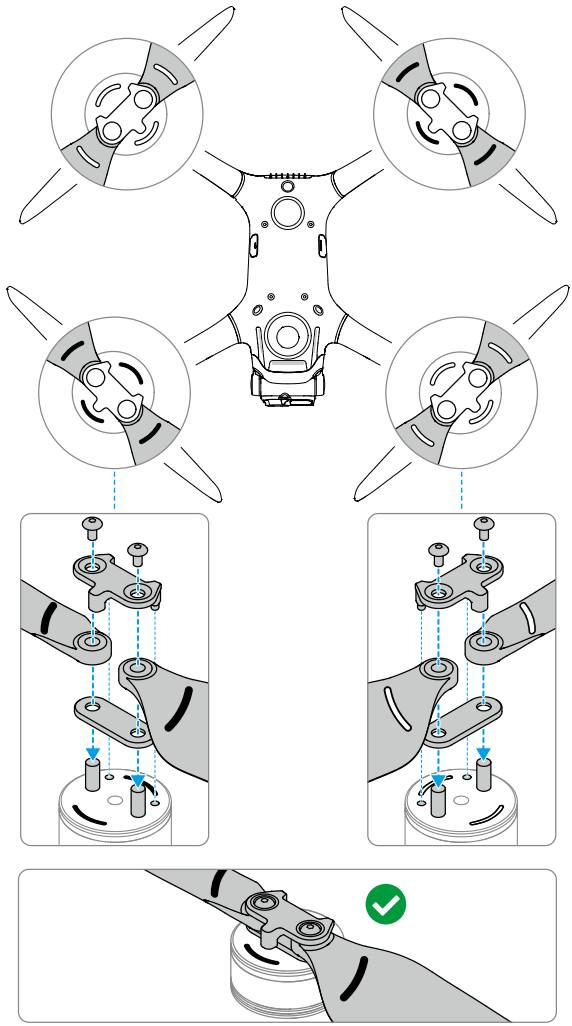

Recommended screw tightening torque: 6.5±0.2 kgf·cm

⚠ When mounting the propellers, make sure the positioning pins of the propeller adapters are inserted into the corresponding mounting holes of the motors.

© 2026 DJI All Rights Reserved.

Notice

Usage and Safety

- The propeller blades are thin; handle them carefully to avoid accidental cuts or deformation from pressure.
- To avoid injury, stay away from rotating propellers or motors.
- Place the aircraft correctly during storage; incorrect placement can press against the propellers, deforming them and reducing propulsion performance.
- Make sure the motors are securely mounted, free of foreign objects, and able to rotate freely. DO NOT fly if the motors cannot rotate freely.
- DO NOT attempt to modify the structure of the motors.
- DO NOT touch the motors directly with your hands immediately after they stop rotating, as this may cause burns.
- When the aircraft is placed inside the dock, make sure to adjust the propeller position before manually closing the dock cover to avoid breaking the propellers.
- DO NOT block any of the ventilation holes on the motors or the body of the aircraft.
- Make sure the ESCs emit a prompt tone after the aircraft is powered on.

Inspection and Cleaning

- Before each flight, make sure that the propellers are correctly installed, secure, and in good condition. If they are aged, damaged, or deformed, replace them before flying. If there is any foreign matter attached to the surface, wipe the propellers with a soft, dry cloth until clean.
- Use the propellers provided by DJI. DO NOT mix propellers of different models. Propellers are consumable components. Purchase additional propellers if necessary.
- DO NOT scratch the propeller surface or touch the propellers directly with your fingers. DO NOT wipe the propellers with oily or alcohol-based solvents; otherwise, the anti-icing coating on the propeller surface will be damaged. It is recommended to replace the propellers with new ones after 500 cumulative flight hours or 12 months of using the anti-icing propellers to maintain good anti-icing performance.

 © 2026 DJI All Rights Reserved.

Replace Propellers

- Use two propellers from the same package. DO NOT mix with propellers from other packages.
- When replacing propellers, replace the matching propeller clips, gaskets, and screws at the same time. DO NOT reuse them.
- After replacing the screws, tighten them to the standard torque.
- When installing the propeller clips, pay attention to the installation direction to avoid installing them backward.
- When tightening the screws, make sure to tighten them vertically downward to avoid tilting. After installation, check that the screws are flush, rotate the propellers to confirm there is no jamming, and make sure the screws are installed properly.

Avionics

Flight Control and Navigation System

The flight control and navigation system built into the aircraft has modules such as the flight controller, IMU, barometer, GNSS receiver, RTK module, and a compass, providing stable and reliable navigation and control. The dedicated industrial flight controller provides multiple operation modes for various applications.

Communications Equipment

The aircraft is equipped with the DJI O4+ Enterprise system and OcuSync video transmission antennas for stable, reliable communication with the control station. It has two built-in 4G Enhanced Transmission modules, supports eSIM and nano-SIM cards, and supports dual-SIM dual-active backup transmission.

Aircraft RTK

The aircraft has a built-in RTK module. When used with DJI Dock 4 and the ground station, it provides centimeter-level high-precision positioning for precise route flying and precise aircraft landing.

Users can select different task accuracy levels in the Task Plan Library in DJI FlightHub 2:

- High-Precision RTK Task: After takeoff, the aircraft waits in the air for RTK convergence before performing the task; the task cannot be paused while waiting. Use this mode for high-precision flight route tasks.

© 2026 DJI All Rights Reserved.

- GNSS Task: The aircraft can start the task directly without waiting for RTK convergence. Use this mode for tasks with lower accuracy requirements, and make sure there are no obstacles within 20 m along the route.

⚠
- Aircraft RTK convergence requires tracking more than 20 satellites; strong signal interference, ionospheric scintillation, or increased ionospheric activity may prevent correct convergence.
- The RTK positioning function requires a good GNSS signal environment (open outdoor areas without obstruction) to ensure high-precision positioning.

Safety System

Sensing System

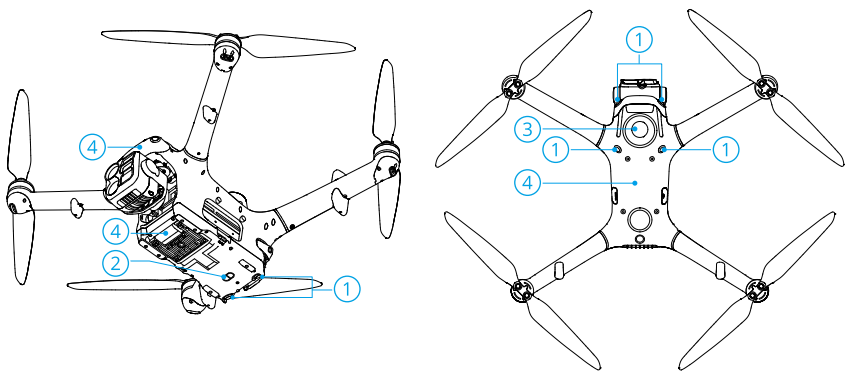

1. Omnidirectional Binocular Color Vision System

   Suitable for well-lit environments where obstacles along the flight route have sufficient texture.

2. Three-Dimensional Infrared Ranging Sensor

   Located on the underside of the aircraft to assist precise height measurement and safe landing.

3. LiDAR

   Located on top of the aircraft, it performs 360° horizontal scanning to provide long-range omnidirectional obstacle avoidance, detecting thin obstacles such as power lines.

4. Millimeter-Wave Radar

   Located at the aircraft nose and above and below the body, it provides obstacle avoidance in poor visibility, such as rain, snow, and heavy fog, and detects metal obstacles such as power lines.

 © 2026 DJI All Rights Reserved.

The vision system is always enabled. After obstacle avoidance is enabled, the aircraft performs obstacle avoidance via the vision system, LiDAR, and millimeter-wave radar. When the GNSS signal is unavailable or weak, the aircraft automatically uses the vision system for positioning.

- Perform regular maintenance and wipe the lenses of the aircraft sensing system to keep the lens surfaces clean. If the lens dirt warning persists across multiple flight tasks, maintain and wipe the lenses promptly.

Sensing System Usage Notes

Notice

- Pay attention to the flight environment. The sensing system only works in certain scenarios and cannot replace human control and judgment. During a flight, always pay attention to the surrounding environment and the warnings in DJI FlightHub 2, and be responsible for and maintain control of the aircraft at all times.
- DO NOT tamper with the sensing system in any way, and make sure the lenses are clean, free of smudges or scratches.
- Avoid flying in rainy or foggy weather, or in other scenarios where the visibility is lower than 100 m. Pay attention to software prompts and fly with caution.
- DO NOT obstruct the sensing system.
- The aircraft can fly at any time of the day or night. However, the vision system becomes unavailable when flying the aircraft in low-light environments. Fly with caution.
- Before use, check the sensing system surface glass:
  - Remove protective films, stickers, and any other obstructions from the surface.
  - If there are water drops, fingerprints, or dirt, wipe them clean first with a lint-free cloth. DO NOT use alcohol or other organic solvents.
  - Return the aircraft for repair if the sensing system surface glass is detached, broken, scratched, or worn.

LiDAR and Millimeter-Wave Radar Limitations

LiDAR and the built-in millimeter-wave radar have detection blind spots. Their detection capability is also limited for obstacles of different sizes and materials. Obstacle avoidance may fail or result in false obstacle avoidance in the following situations. Fly with caution and take manual control when necessary:

© 2026 DJI All Rights Reserved.

- Flying in special weather conditions such as fog, clouds, rain, snow, hail, haze, sand or dust, or clusters of insects or particles (such as poplar fluff or willow catkins).
- Small branches are present around the flight route, such as when flying in dense forests or shrubs.
- Highly reflective road signs or bright metal signs are present above or below the flight route.
- Strong light interference is present in the flight direction, such as when flying toward the sun.
- Water droplets or heavy dirt are present on the radar radome.
- An obstacle is within an observation blind spot of the obstacle avoidance radar.
- Glass curtain walls or mirror-like surfaces are present along the flight route.

Vision System Limitations

- Without satellite positioning, the vision positioning system works best at heights of 0.5–30 m in open, flat areas; positioning performance may decline outside this range, so fly with caution.
- In low-light environments, the vision systems may not achieve optimal positioning performance even if the auxiliary bottom light is turned on. Fly with caution if the GNSS signal is weak.
- The vision system may not work properly over water. Maintain control of the aircraft at all times and assess the surrounding environment. DO NOT over-rely on the vision system.
- The vision system cannot accurately identify large open-frame structures or linear objects, such as tower cranes, high-voltage transmission towers and lines, or cable-stayed bridges.
- The vision system cannot work properly near surfaces without clear pattern variations or where the light is too bright or too dark. The vision system cannot work properly in the following situations:
  - Flying near monochrome surfaces (e.g., pure black, white, red, or green surfaces).
  - Highly reflective surfaces or surfaces with reflections, such as ice or road signs.
  - Flying near water or transparent surfaces.
  - Moving surfaces, such as above crowds or shrubs and grass swaying in strong winds.
  - Flying in an area with frequent and drastic lighting changes.

 © 2026 DJI All Rights Reserved.

- Flying near extremely dark (e.g. indoor dark environments) or extremely bright (e.g. outdoor environments with direct sunlight) surfaces.
- Surfaces that strongly absorb or reflect light (e.g., mirrors).
- Flying near surfaces without clear patterns or textures.
- Flying near surfaces with repeating identical patterns or textures (e.g., tiles with the same design).
- Flying near obstacles with small surface areas (e.g., tree branches and power lines).

Three-Dimensional Infrared Ranging Sensor Limitations

The Three-Dimensional Infrared Ranging Sensor may not provide accurate distances in the following scenarios:

- Surfaces that strongly absorb light, such as asphalt roads.
- Scenarios with large highly reflective surfaces (e.g., multiple traffic signs placed side by side).
- Flying near tiny obstacles (e.g., iron wires, cables, tree branches, or leaves).
- Flying near mirrors or transparent objects (e.g., water or glass).
- Flying in low-visibility environments (e.g., heavy fog or snow).

Vision Assist

Vision Assist automatically switches between views from the vision sensors based on the flight direction to help users navigate and observe obstacles during flight.

- When Vision Assist is enabled, the quality of the video transmission may be lower due to transmission bandwidth limits.
- It is normal for propellers to appear in the vision assist view.
- When the ambient light level decreases, the full-color image switches to a black-and-white image.
- Vision assist should be used for reference only. Glass walls and small objects such as tree branches, electric wires, and kite strings cannot be displayed accurately.
- Vision assist is not available when the aircraft has not taken off or when the video transmission signal is weak.

© 2026 DJI All Rights Reserved.

Tap an arrow to switch the Vision Assist view direction, press and hold to lock the direction, and tap the lock icon to unlock it. Tap the center of the view to maximize it.

- When the direction is not locked, the vision assist view automatically switches to the vision view of the current flight direction. Tap any directional arrow of the vision assist view to temporarily switch to the vision sensor view of that direction, and it will automatically return to the vision sensor view of the current flight direction.
- When the vision assist direction is locked in a specific direction, tap any other arrow to unlock and switch the vision assist view.

DJI AirSense

Crewed airplanes or helicopters with Automatic Dependent Surveillance–Broadcast (ADS-B) transmitters can broadcast flight information. The DJI aircraft equipped with DJI AirSense (ADS-B In) can receive the flight information broadcast from ADS-B transmitters that comply with the 1090ES (RTCA DO-260) or UAT (RTCA DO-282) standard within a range of tens of kilometers. **DJI AirSense only issues warning messages under certain circumstances when specific crewed airplanes or helicopters are approaching, and is not able to actively control or take over the DJI aircraft to avoid approaching crewed airplanes or helicopters.**DJI AirSense has the following limitations:

1. DJI AirSense can only receive messages broadcast by crewed airplanes or helicopters installed with an ADS-B Out device that is in compliance with the 1090ES or UAT standard. DJI AirSense cannot receive messages from crewed airplanes or helicopters that are not equipped with ADS-B Out devices or equipped with devices that are not functioning properly.
2. DJI AirSense operates over radio frequencies; if an obstruction is present between the DJI aircraft and a crewed airplane or helicopter, it cannot effectively receive that aircraft's broadcasts or issue warnings.

 © 2026 DJI All Rights Reserved.

3. Warning messages may be sent with a delay if DJI AirSense experiences any interference from the surrounding environment. Users need to observe the surrounding environment and fly with caution.
4. Warning messages may not be accurate when the DJI aircraft is unable to obtain its location information.
5. DJI AirSense cannot receive broadcasts from crewed airplanes or helicopters or issue any warnings when DJI AirSense is disabled or not functioning properly.

DJI FlightHub 2 displays all DJI AirSense data reported by aircraft in the docks within the current project, shows crewed airplane or helicopter positions on the map, and issues warnings. DJI AirSense obtains and analyzes crewed aircraft position, altitude, heading, and speed, compares them with the DJI aircraft's current position, altitude, heading, and speed, and calculates the risk level of approaching crewed aircraft in real time.

- Warning (high collision risk): A red airplane icon appears on the map, and a global message at the top of the DJI FlightHub 2 page states that a crewed aircraft has been detected nearby and you should take control promptly to avoid it. When a high collision risk occurs, click the dock name to open the device window and obtain remote control of the aircraft to avoid the crewed aircraft.
- Caution (medium collision risk): A yellow airplane icon will appear on the map when a crewed airplane or helicopter is relatively near the dock aircraft.
- Normal (low collision risk): A blue airplane icon will appear on the map when the crewed airplane or helicopter is relatively far away from the dock aircraft.

Users can tap in the lower right corner of the map to decide whether to enable the medium and low collision risk warnings, and follow the prompts after receiving a warning.

IP Rating of the Aircraft

1. When equipped with the Intelligent Flight Battery and tested under controlled laboratory conditions, the DJI Matrice 5TD aircraft achieves an IP55 rating under IEC 60529. The rating is not permanent and may decrease due to wear from long-term use.
   - DO NOT fly when the amount of rainfall exceeds 100 mm/24 h.
   - Before inserting the battery into the aircraft, make sure the battery surfaces and connectors and the aircraft battery compartment surfaces and connectors are dry and free of water.
   - Damage caused by immersion in liquids is not covered under warranty.
2. The aircraft does not achieve an IP55 protection rating in the following circumstances:

© 2026 DJI All Rights Reserved.

- Batteries other than the official battery are used.
- The battery is not firmly installed.
- The waterproof plugs on the aircraft external ports are not securely closed when the ports are not in use.
- External devices (such as the speaker or the spotlight) are not firmly installed or the screws are not tightened.
- Other damage to the aircraft body, such as cracks in the shell or failed waterproof adhesive.

3. The body surface may become discolored after long-term use. However, such color change does not affect the performance and IP rating of the device.

1.3 Dock

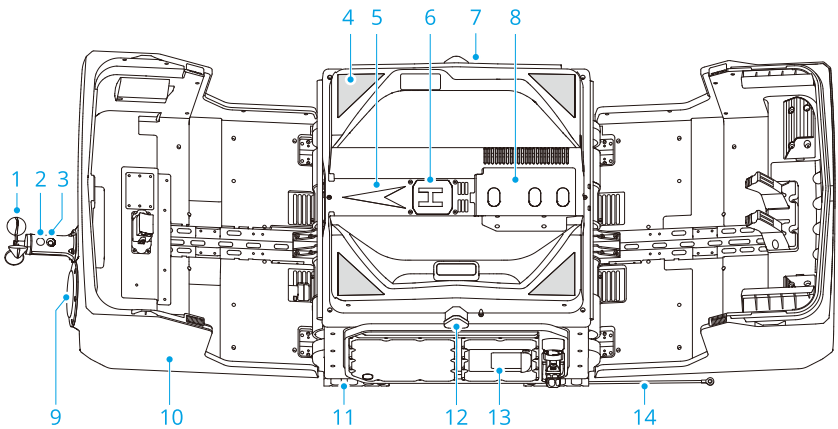

1. Wind Speed Gauge
2. Dock Camera
3. Camera Auxiliary Light
4. Illuminated Positioning Markers
5. Aircraft Front Orientation Marker
6. Landing Pad[1]
7. Drain Pipe Hole (located underneath the dock)
8. Battery Swapping Module
9. Rainfall Gauge
10. Dock Cover
11. Mounting Base Brackets
12. Dock Status Indicator
13. Electrical Cabinet
14. Earth Wire

 © 2026 DJI All Rights Reserved.

[1] The dock comes with a built-in wireless charging module. Make sure that the landing pad surface is clear of any metal objects in order to avoid high temperatures that may damage the landing pad.

Dock Status Indicator and Buzzer Alerts

Normal States		
.....	Blinks white	The dock is in standby mode.
.....	Blinks blue Buzzer emits rapid beeps	The DJI O4 Ground Station is pairing with the aircraft.
.....	Blinks green	The aircraft is performing a flight task.
—	Solid blue	The dock/DJI O4 Ground Station is being updated or undergoing remote or local debugging.
Warning States		
.....	Blinks red Buzzer emits intermittent beeps	The dock cover is opening or closing, or the aircraft is taking off or landing. ⚠ **Keep a safe distance from the dock to avoid injury.**
.....	Blinks red and yellow alternately	The emergency stop button is pressed.

© 2026 DJI All Rights Reserved.

Electrical Cabinet Panel

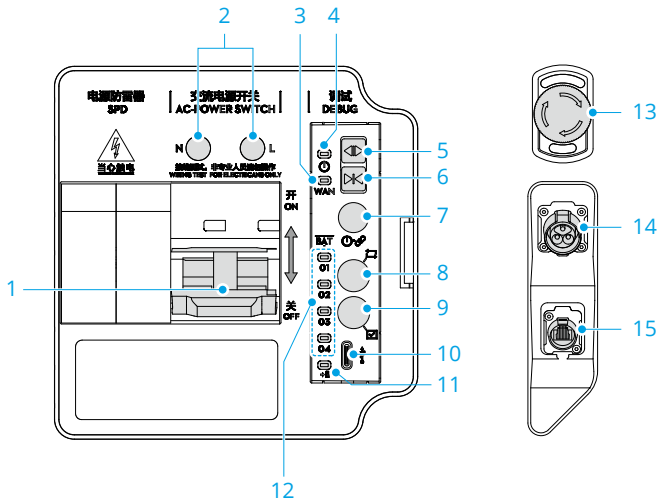

1. **AC Power Switch**

   Connects or disconnects the AC power supply.

2. **Wire Testing Terminals**

   Used with a multimeter to perform wiring tests.

3. **Ground Station Connection Indicator**

   Indicates the connection status between the dock and the DJI O4 Ground Station.

4. **Power Indicator**

   Indicates the AC power status.

5. **Open Button**[1]

   Press and hold to open the dock cover manually.

6. **Close Button**[1]

   Press and hold to close the dock cover manually.

7. **Multifunctional Button**

   - Press and hold to initiate linking on the DJI O4 Ground Station.
   - When AC power is disconnected, the battery in the battery compartment automatically powers the dock if the battery level is above 10%. Press once, then press and hold the button to disable or enable battery power supply.

8. **Battery Install/Remove Selection Button**

 © 2026 DJI All Rights Reserved.

Press to select the battery compartment for installing or removing a battery. Refer to Aircraft Battery Swapping and Charging for more information.

9. **Battery Install/Remove Confirmation Button**

   Press to confirm the battery installation or removal operation. Refer to Aircraft Battery Swapping and Charging for more information.

10. **USB-C Port**

    - Connect the dock to a smartphone using a data cable to configure the dock via the DJI Enterprise App.
    - Connect the dock to a computer using a USB-C to USB-A data cable to debug the dock via DJI Assistant 2 (Enterprise Series).

11. **Battery Installation Indicator**

    Indicates the battery installation status of the dock.

12. **Battery Status Indicator**

    Indicates the status of the battery in the corresponding battery compartment.

13. **Emergency Stop Button**

    When the emergency stop button is pressed, the moving mechanism of the dock will stop operating. If the aircraft is in flight, it will fly directly to the alternate landing site.

14. **AC-IN Port**

    Connect the power cable to supply AC power to the dock.

15. **PoE OUT Port**

    Connect to the LAN port of the DJI O4 Ground Station using an Ethernet cable to supply power to the DJI O4 Ground Station and enable data communication.

[1] The dock cover cannot be opened or closed while batteries are being installed or removed manually.

Electrical Cabinet Indicators

Power Indicator		
—	Solid red	The AC power supply is normal.
—	Solid blue	The battery in the compartment is providing backup power to the dock.
◎	Off	The dock is not powered on.
Ground Station Connection Indicator		
	Blinks green	The dock and the DJI O4 Ground Station are connected and can communicate normally.

© 2026 DJI All Rights Reserved.

◎	Off	The dock is not connected to the DJI O4 Ground Station.
Battery Status Indicator		
—	Solid green	Battery status is normal.[1]
·····	Blinks green quickly	The current battery compartment is selected.
—	Solid blue	The battery in the corresponding compartment is providing backup power to the dock.
—	Solid red	Battery error.
◎	Off	No battery in the corresponding compartment.
Battery Installation Indicator		
·····	Blinks blue quickly	Ready for battery installation.

[1] Includes both charging and fully charged states. The dock supports charging up to two batteries simultaneously.

Dock Cover

⚠
- Before opening the dock cover, check that the emergency stop button is released. If the emergency stop button is pressed, rotate it clockwise to release it.
- Before opening or closing the dock cover, make sure that there are no heavy objects on the dock cover surface and no obstructions within the movement range of the dock cover, and keep a safe distance from the dock cover mechanism to avoid personal injury. Press the emergency stop button if necessary to stop the mechanism.
- After the dock cover is open, DO NOT press hard on the dock cover or place heavy objects on its surface.
- The dock cover closes automatically when the aircraft battery level is too low. Stay clear of the dock cover while it is closing to avoid injury.

Opening and Closing the Dock Cover

Using DJI Enterprise App

Open DJI Enterprise App and enter the dock settings page. Tap ✂ to enter the dock control page, and then tap the dock cover icon to open or close the cover.

 © 2026 DJI All Rights Reserved.

Using DJI FlightHub 2

Open the DJI FlightHub 2 Project page, click > to open the device status window, and then click **Action** > **Remote Debugging**. Alternatively, open the Devices page, click **Dock/Ground Station** > > **Remote Debugging** to open or close the dock cover.

If the dock does not detect the aircraft, use the dock camera to check whether the aircraft is inside the dock, and follow the pop-up instructions in DJI FlightHub 2.

If the aircraft is not inside the dock, click **Force Close Dock Cover**. If the aircraft is inside the dock, click **Close Dock Cover**.

- When closing the dock cover, the aircraft will automatically power on, and the propellers will slowly rotate to avoid damage to the propellers.

- DO NOT click **Force Close Dock Cover** when the aircraft is inside the dock. Otherwise, the aircraft propellers may be broken and the dock cover may be damaged.

Using the Electrical Cabinet Buttons

Press and hold the corresponding electrical cabinet button to open or close the dock cover.

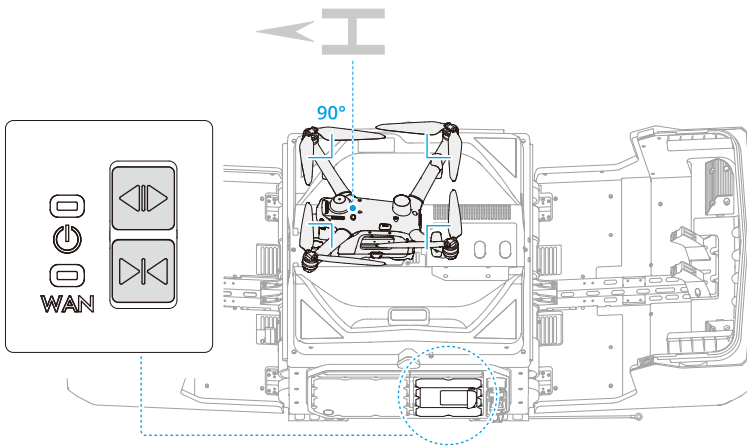

- Keep your hands away from the dock cover to avoid injury.
- Before closing the dock cover, align the aircraft propellers inside the landing pad so the two blades form a 90° angle, preventing equipment damage or broken blades when the cover closes.

© 2026 DJI All Rights Reserved.

Landing Pad

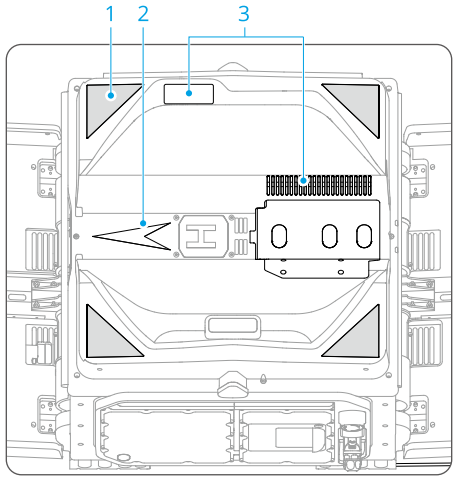

1. Illuminated Positioning Markers: There are four illuminated positioning markers on the landing pad. The aircraft can identify the dock position using the markers to assist with landing.
2. Aircraft Front Orientation Marker: When placing the aircraft on the landing pad, make sure the aircraft heading is aligned with the arrow on the landing pad. Otherwise, the aircraft may be damaged.
3. Air Conditioner Inlet and Outlet: Wipe and clean them regularly to prevent dust blockage.

⚠ After the dock is powered on, DO NOT place any objects other than the aircraft, such as metal objects or electronic devices, on the landing pad.

Battery Compartments and Battery Swapping Module

The battery compartments store aircraft batteries, and the battery swapping module automatically replaces the battery for the aircraft. If the AC power supply to the dock is unexpectedly disconnected, the batteries in the battery compartments can continue to supply power to the dock to keep the device online and ensure that the aircraft can return safely.

⚠
- After the AC power supply to the dock is disconnected, functions such as aircraft charging, air conditioning, and wind speed gauge heating are not supported. Troubleshoot and restore the power supply as soon as possible, or turn off

 © 2026 DJI All Rights Reserved.

the backup battery power. If the power supply is not restored for an extended period (more than 60 days), the backup battery may be over-discharged and damaged.

- If the dock is left idle outdoors for an extended period after installation, remove the aircraft from the dock for separate storage, and remove all the batteries from the battery compartments.

Air Conditioning System

The dock has a built-in air conditioning system that automatically adjusts the temperature and humidity inside the dock compartments to provide a suitable storage environment for the aircraft and batteries.

Users can open the DJI FlightHub 2 Devices page, click **Dock/Ground Station >** , open **Device Maintenance**, and enable **Remote Debugging** to test the heating or cooling function of the air conditioning system.

To ensure the service life of the air conditioning system, the interval between cooling and heating operations must be more than 5 minutes. When switching between the two operations, wait until the countdown on the operation panel ends.

Dock Environment Sensors

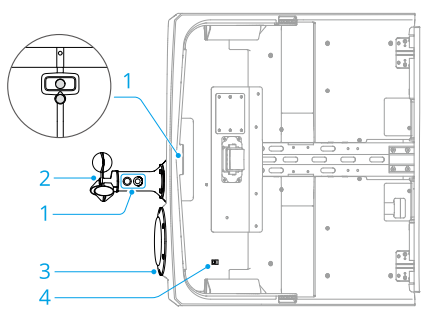

1. Dock Camera and Auxiliary Light: Used to view the real-time conditions at the dock site.
2. Wind Speed Gauge: Used to monitor wind conditions around the dock. The wind speed gauge features heating and can work in low-temperature environments. For flight safety, flight tasks cannot be performed when the wind speed is too high.

© 2026 DJI All Rights Reserved.

3. Rainfall Gauge: Used to monitor rainfall around the dock. The rainfall gauge features heating and can work in low-temperature environments. For flight safety, flight tasks cannot be performed when the rainfall is too heavy.
4. Internal Temperature and Humidity Sensor: Located on the inner side of the dock cover, used to detect the air temperature and humidity inside the dock compartment.

- The wind speed gauge can only measure the wind speed near the dock, which may be different from the wind speed provided by local meteorological departments. If the aircraft ascends to high altitude, the wind speed and direction may change significantly. Fly with caution when the measured wind speed is close to the maximum wind speed resistance of the aircraft.
- DO NOT press hard on the surface of the rainfall gauge. Otherwise, the sensing module inside may be damaged.
- Regularly clean the rainfall gauge surface. Replace the rainfall gauge immediately if it is deformed or damaged.
- If the dock is installed near a vibration source such as a railway, false detection of rainfall may be triggered. Try to keep the dock away from areas with strong vibration sources or strong noise.

Dock Network Connection

The dock must connect to the network through the DJI O4 Ground Station. The ground station can use a wired network (connected to an external network through the WAN port) or a 4G cellular network (requires the installation of the DJI Cellular Dongle 2). For details on network connection, visit https://enterprise.dji.com/dock-4/downloads to view the *Installation and Setup Manual*.

Data Consumption

After a cellular dongle is installed on the DJI O4 Ground Station, data consumption is closely related to the number of media files transferred, the file type, the resolution, and the livestream duration. The following data is for reference only. Refer to the actual data consumption.

Infrared Photos	Approximately 1 MB per photo
Visible Light Photos (4K)	Approximately 4.5 MB per photo
Visible Light Photos (8K)	Approximately 11 MB per photo
Video (4K)	Approximately 160-450 MB per minute
Video (1080p)	Approximately 63-105 MB per minute

 © 2026 DJI All Rights Reserved.

IP Rating of the Dock

1. Under controlled laboratory conditions, DJI Dock 4 achieves an IP56 protection rating under IEC 60529 standards. The protection rating is not permanent and may decrease due to wear from long-term use. Perform regular maintenance.
2. The device does not achieve an IP56 protection rating in the following circumstances:
   - The electrical cabinet door is not firmly closed or the screws are not tightened.
   - The dock cover is not firmly closed.
   - The waterproof plugs for the expansion ports are not firmly closed if not used.
   - External modules (such as the wind speed gauge module) are not securely installed or properly secured.
   - There is other possible damage to the dock body, such as a cracked shell or failed waterproof adhesive.
3. The appearance may become discolored after long-term use. However, this does not affect the performance or protection capability of the product.

1.4 DJI O4 Ground Station

Parts of the Product

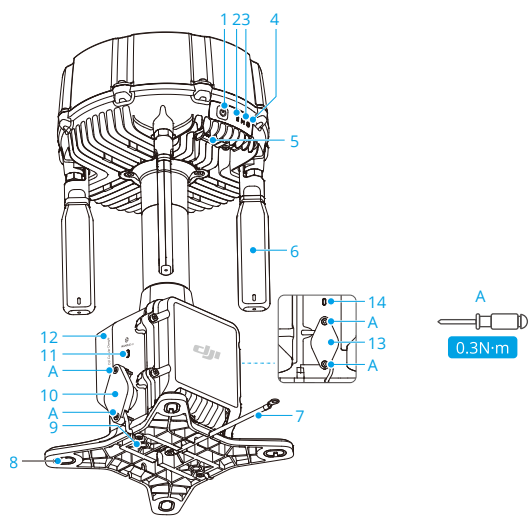

1. Power Button
2. Power Indicator

© 2026 DJI All Rights Reserved.

3. Mode Indicator
4. GNSS Signal Indicator
5. USB-C Port
6. OcuSync™ Pro Directional Antennas
7. Earth Wire
8. Slotted Holes
9. M6 Threaded Holes
10. WAN Port[1]
11. WAN Port Indicator
12. Cellular Dongle Compartment
13. LAN Port[1]
14. LAN Port Indicator

[1] When not in use, make sure to tighten the protective port cover screws to protect the product from moisture and dust. The IP67 rating is achieved when the screws are tightened or an Ethernet cable connector is inserted.

For information about the ground station power supply, installation, network configuration, RTK calibration, and other working modes, refer to the DJI O4 Ground Station User Manual.

Mode Indicator

M	Operating Mode
M	**Gateway Mode (Purple)** • Solid: Connected to the aircraft • Blinking: Disconnected from the aircraft

Power Indicator

When powered by an external power supply (PoE), the power indicator stays solid blue . When powered only by the built-in battery, the power indicator behaves as follows.

	> 60% (Green)
	20%–60% (Yellow)
	< 20% (Red)

- When powered through the PoE input port, the battery voltage of the device remains at 7.4 V.
- When the battery level is low, the buzzer emits continuous beeps.
- When charging via the USB-C port, the power indicator blinks quickly when the charging power is sufficient, and blinks slowly when it is insufficient.

 © 2026 DJI All Rights Reserved.

WAN/LAN Port Indicators

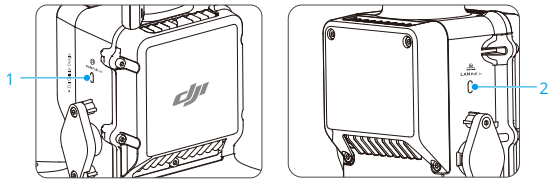

1. WAN Port Indicator

	Solid green	External network connection is normal.
	Solid blue	External network connection error. Ensure the Ethernet cable is securely connected to the WAN port, and the external network is functioning properly.
·····	Blinks red quickly (turns solid after 10 seconds)	Insufficient PoE power input. Check if the PoE power supply meets the requirements.
—	Solid red	Neither the PoE power supply nor the external network is detected. Check the PoE power supply and the external network connection.

2. LAN Port Indicator

	Solid green	Connection to the dock is normal.
	Solid blue	Dock connection error. Ensure the Ethernet cable is securely connected to the LAN port, and the connection to the dock is functioning properly.
·····	Blinks red quickly (turns solid after 10 seconds)	Insufficient PoE power input. Check that the dock is working properly.
—	Solid red	Neither the PoE power supply nor the dock is detected. Check the PoE power supply and the dock connection.

© 2026 DJI All Rights Reserved.

Operating Mode

When used with DJI Dock 4, the ground station works in Gateway Mode as the dock control mode. The ground station connects to the internet via Ethernet or the DJI Cellular Dongle 2 installed on the ground station, and then connects to the DJI FlightHub 2 cloud platform.

In Gateway Mode, only one aircraft can be connected at a time. DJI Dock 4 and aircraft in the same organization can connect to the ground station at different times, enabling rotational use of multiple devices.

Roaming Base Station

When the aircraft performs long-distance flight tasks, ground stations deployed at different locations can be used to extend the communication coverage of the aircraft.

Ground stations participating in roaming must be in Roaming Base Station Mode under Gateway Mode, maintain a normal network connection, and be connected to DJI FlightHub 2.

The system automatically switches the ground station according to link quality and continues transmitting the video transmission and control signals of the aircraft.

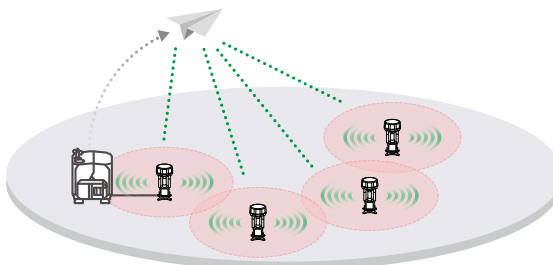

Click the link below or scan the QR code to watch the tutorial video to learn about the roaming base station feature.

https://enterprise.dji.com/dock-4/video

 © 2026 DJI All Rights Reserved.

1.5 DJI Enterprise App

DJI Enterprise App supports device activation and deployment. For details, refer to the Installation and Setup Manual.

1.6 DJI FlightHub 2

DJI FlightHub 2 is the cloud management platform for DJI Dock 4, supporting device management, route planning, task distribution, live flight controls, and flight footage viewing. Visit https://fh.dji.com to register and log in.

Visit https://fh.dji.com/user-manual/en/overview.html to read the DJI FlightHub 2 User Guide and learn more about DJI FlightHub 2 page features and usage.

1.7 Command and Control Link (C2 Link)

During a flight task, the video transmission signal strength will be displayed in DJI FlightHub 2:

-

: The transmission signal is strong.
-

: The transmission signal is medium.
-

: The transmission signal is weak. A voice prompt will announce: "Image transmission signal weak."
-

: The transmission signal is disconnected. Approximately 14 seconds after disconnection, a voice prompt announces: "Image transmission signal lost."

For detailed specifications, including operating frequency bands, transmission power (EIRP), maximum signal range, and latency, refer to the Specifications section.

© 2026 DJI All Rights Reserved.

2 Performance and Limitations

2.1 Specifications

Visit the following website for specifications.

https://enterprise.dji.com/dock-4/specs

2.2 Legal Requirements and Flight Precautions

- DO NOT operate the aircraft under the influence of anesthesia, alcohol, or drugs, or when experiencing dizziness, fatigue, nausea, or any other condition that may impair your ability to operate the aircraft safely.
- DO NOT operate in the vicinity of crewed aircraft, and make sure the aircraft does not interfere with large crewed aircraft on their flight routes. Be alert and make sure there is no other aircraft in the operation area when setting the flight task plan.
- DO NOT use the aircraft at venues of major events. Such venues include but are not limited to sports stadiums and concerts.
- DO NOT fly the aircraft without authorization in areas prohibited by local laws. Prohibited areas include airports, national borders, major cities and densely populated areas, venues of major events, areas where emergencies have occurred (such as forest fires), and locations with sensitive structures (such as nuclear power plants, power stations, hydropower plants, correctional facilities, heavily traveled roads, government facilities, and military zones).
- DO NOT fly the aircraft above the authorized altitude. DO NOT use the aircraft to carry illegal or dangerous goods or payloads.
- Make sure you understand the type of flight activity, such as recreational, public-service, or commercial use. Obtain the required permit from the relevant authorities before flight. Consult a local legal professional if necessary for detailed definitions of flight activity types. Note that some countries and regions prohibit any commercial use of the aircraft.
- Respect the privacy of others when using the camera. DO NOT conduct surveillance operations, such as image capture or video recording on any person, entity, event, performance, exhibition, or property without authorization or where there is an expectation of privacy, even if the image or video is captured for personal use.
- Be advised that in certain areas, recording or photographing people, groups, events, performances, exhibitions, or other subjects with a camera may infringe copyright, privacy, or other legitimate rights of others, even if not for commercial purposes. In certain areas and countries, DO NOT use small aerial model aircraft for any

 © 2026 DJI All Rights Reserved.

commercial activities. Therefore, make sure to understand and comply with local laws and regulations before use.

- DO NOT use this product for illegal or inappropriate activities, including but not limited to spying, military operations, unlawful investigations, or infringements of others' privacy or property rights.

Before using for the first time, read the Safety Guidelines to learn more about safety precautions.

2.3 Center of Gravity Limitations

The original aircraft center of gravity has been adjusted before delivery.

The aircraft is equipped with an E-Port V3 Low-Speed Port and an E-Port V3 High-Speed Port for connecting official or third-party payloads. If any official or third-party payloads are installed on the aircraft, make sure to adjust the aircraft center of gravity according to the guidelines and requirements. Visit https://developer.dji.com for more information.

© 2026 DJI All Rights Reserved.

3 Normal Procedures

3.1 Airspace and Radio Frequency Environment Requirements

The operating procedures described in this section were developed, tested, and approved by DJI. Operators may adjust them according to the actual operating environment, provided that the adjustments do not affect the safe use of the product. DJI assumes no liability for any consequences arising from operators adjusting the procedures on their own.

1. DO NOT fly in severe weather, such as strong winds of 12 m/s or higher, snow, moderate rain, or fog.
2. Choose an open flight area without tall buildings nearby. Buildings containing large amounts of reinforcing steel can interfere with the compass and block satellite positioning signals, degrading or preventing aircraft positioning.
3. Fly the aircraft within visual line of sight (VLOS). Avoid mountains and trees blocking GNSS signals. Any flight beyond visual line of sight (BVLOS) can be conducted only when the aircraft performance, the knowledge and skills of the pilot, and the operational safety management are compliant with local regulations for BVLOS. When flying, stay away from obstacles, crowds, and bodies of water, and avoid airports, highways, railway lines, railway stations, and city centers unless any permit or approval is obtained under local regulations.
4. Make sure the beacon and the auxiliary bottom light are enabled at night for flight safety.
5. The performance of the aircraft and its battery is limited when flying at high altitudes. Fly with caution. DO NOT fly above the specified altitude.
6. The braking distance of the aircraft is affected by the flight altitude. The higher the altitude, the greater the braking distance. When flying at high altitudes, you should reserve adequate braking distance to ensure flight safety.
7. DO NOT take off from moving surfaces, such as a moving car or boat.
8. Be careful when taking off in the desert or from a beach to avoid sand entering the aircraft.
9. DO NOT operate the aircraft near bird flocks.
10. Other wireless devices may cause signal interference. It is recommended to power off unnecessary nearby radio transmitting devices such as Wi-Fi and Bluetooth devices.
11. Exercise caution when flying near electromagnetic interference sources, and continuously watch for video freezing or weak transmission signal strength. Follow

 © 2026 DJI All Rights Reserved.

prompts to return and land promptly if needed for flight safety. Interference sources include high-voltage power lines, power transmission substations, radar stations, mobile phone base stations, and television broadcast towers. Strong magnetic or electric field interference may damage the aircraft or cause a crash.

12. Set an alternate landing site before flight; the aircraft will land there if it cannot land at the dock. Use a V-shaped marker with a single-color background at the alternate site. Otherwise, visual recognition may be affected and landing accuracy reduced.
13. DO NOT use the aircraft or the dock in an environment at risk of fire or explosion.
14. Use the dock and aircraft within the specified operating temperature range. Before operating in low temperatures, use the dock camera view in DJI FlightHub 2 to check the dock cover for snow or ice, the aircraft body for snow, and the propellers for ice. During flight, monitor motor overload or overtemperature warnings; if one appears, return and land promptly, then check the propellers for icing.

3.2 Flight Restrictions

GEO (Geospatial Environment Online) System

The DJI Geospatial Environment Online (GEO) System is a global information system that provides real-time information on flight safety and restriction updates and prevents UAVs from flying in restricted airspace. Under exceptional circumstances, restricted areas can be unlocked to allow flights. Prior to that, you must submit an unlocking request based on the current restriction level in the intended flight area. The GEO system may not fully align with local laws and regulations. You are responsible for your own flight safety and must consult with the local authorities on the relevant legal and regulatory requirements before requesting to unlock a restricted area. For more information about the GEO system, visit https://fly-safe.dji.com.

GEO Zones

The DJI GEO system designates safe flight locations, provides risk levels and safety notices for individual flights, and offers information on restricted airspace. All restricted flight areas are referred to as GEO Zones, which are further divided into Restricted Zones, Authorization Zones, Warning Zones, Enhanced Warning Zones, and Altitude Zones. You can view such information in real time in DJI FlightHub 2. GEO Zones are specific flight areas, including but not limited to airports, large event venues, locations where public emergencies have occurred (such as forest fires), nuclear power plants, prisons, government properties, and military facilities. By default, the GEO system limits takeoffs and flights in zones that may cause safety or security concerns. A GEO Zone map that

© 2026 DJI All Rights Reserved.

contains comprehensive information on GEO Zones around the globe is available on the official DJI website: https://fly-safe.dji.com/nfz/nfz-query.

The information in DJI FlightHub 2 and on the website is for reference only. Refer to local laws and regulations for the latest details.

Buffer Zone

Buffer Zones for Restricted Zones/Authorization Zones

To prevent the aircraft from accidentally flying into a Restricted or Authorization Zone, the GEO system sets up, as configured, a buffer zone of about 20 meters wide outside each Restricted and Authorization Zone. As shown in the illustration below, the aircraft can only take off and land in place or fly toward an opposite direction of the Restricted or Authorization Zone when inside the buffer zone, and cannot fly toward the Restricted or Authorization Zone unless an unlocking request has been approved. The aircraft cannot fly back into the buffer zone after leaving the buffer zone.

Buffer Zones for Altitude Zones

A buffer zone of about 20 meters wide is set up outside each Altitude Zone. As shown in the illustration below, when approaching the buffer zone of an Altitude Zone in a horizontal direction, the aircraft will gradually reduce its flight speed and hover outside the buffer zone. When approaching the buffer zone from underneath in a vertical direction, the aircraft can ascend and descend in altitude or fly in an opposite direction of the Altitude Zone, but cannot fly toward the Altitude Zone. The aircraft cannot fly back into the buffer zone in a horizontal direction after leaving the buffer zone.

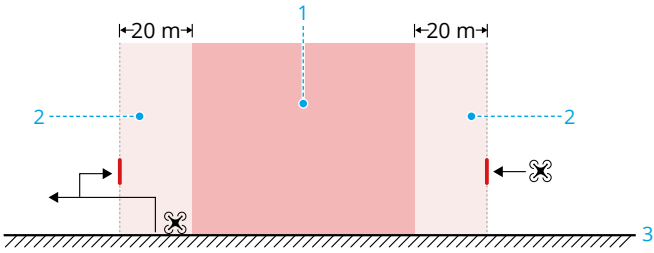

1. Restricted Zone or Authorization Zone
2. Buffer Zone
3. Ground
4. Altitude Zone
5. Max Altitude
6. Flight Altitude

 © 2026 DJI All Rights Reserved.

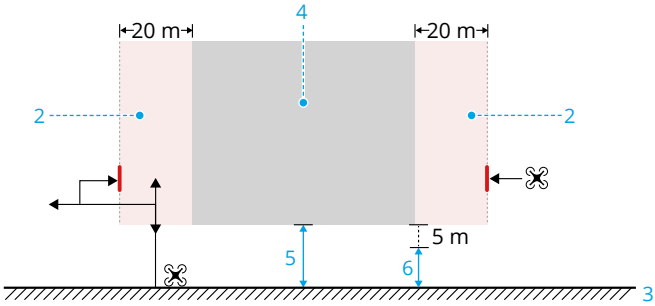

Custom Flight Area

Users can tap in DJI FlightHub 2 to enter the Map Task Area and set the Custom Flight Area.

Custom flight areas include the following types:

- **Custom Task Area**: The aircraft can perform tasks within this area.
- **Custom GEO Zone**: The aircraft cannot fly into this area to perform tasks. In different flight modes, the aircraft behaves differently when it reaches the boundary of the custom GEO Zone:
  - **Live Flight Controls: The aircraft will brake and hover at the boundary and will not return to home automatically**.
  - **Flight Task: The aircraft will brake and hover at the boundary and then return to home automatically**.
  - **RTH: The aircraft bypasses Custom GEO Zones when returning to home**.
- **Custom No-Landing Zone: The aircraft cannot land automatically within this area**.

Visit https://fh.dji.com/user-manual/en/overview.html for detailed instructions.

- During a flight task, if landing is triggered within the Custom No-Landing Zone, the aircraft will automatically plan the shortest path to leave the zone before landing. If the aircraft encounters a GEO Zone or an obstacle, or if landing is cancelled, it will stop the leaving process. In this case, manually take control and fly the aircraft out of the No-Landing Zone and then land the aircraft. If you do not take control in time, the aircraft will land in place.
- If forced landing within the No-Landing Zone is needed, make sure to check the landing environment and ensure safety before landing.

© 2026 DJI All Rights Reserved.

Unlocking GEO Zones

Self-Unlocking is intended for unlocking Authorization Zones. You can apply for an unlocking license at https://fly-safe.dji.com and use DJI FlightHub 2 to unlock: in DJI FlightHub 2, go to **Devices** > **Dock/Ground Station** > ⊠ > **Remote Debugging** > **Dock Control** to set an unlocking license and request unlocking.

Custom Unlocking is tailored to users with special requirements and designates a special flight area for them. Different flight permission documents must be supplied depending on the requested area and requirements. Users in all countries and regions can apply through the website at https://fly-safe.dji.com.

⚠
- To ensure flight safety, the aircraft will not be able to fly out of the unlocked zone after entering it. If the Home Point is outside the unlocked zone, the aircraft will not be able to return home.
- Make sure to re-import the unlocking license when using a new aircraft.

Flight Altitude and Distance Limits

Max altitude restricts the flight altitude of the aircraft, while max distance restricts the flight radius of the aircraft around the Home Point. These limits can be set in DJI FlightHub 2 for improved flight safety.

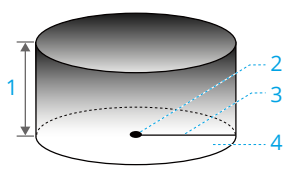

1. Max Altitude
2. Home Point (Horizontal Position)
3. Max Distance
4. Height of aircraft when taking off

Strong GNSS Signal

	Flight Restrictions	Tip:
Max Altitude	The flight altitude cannot exceed the maximum altitude set in DJI FlightHub 2	Max flight altitude reached
Max Distance	The straight-line distance from the aircraft to the Home Point cannot exceed the maximum flight distance set in DJI FlightHub 2	Max flight distance reached

 © 2026 DJI All Rights Reserved.

To ensure flight safety, during aircraft operations, a clearance of more than 1.5 m should be reserved above and around the aircraft, and a safe distance should be maintained from the ground or obstacles below. Increase the clearance appropriately when operating in complex environments.

3.3 Use of Takeoff and Landing Equipment

The dock can accommodate one aircraft, from where it can take off and land. The dock can also charge the aircraft battery and provide a suitable environment for aircraft storage.

3.4 Distance to the control station

When using DJI FlightHub 2 for remote automated operations, the aircraft takes off from and lands on the dock. Install a protective fence to ensure pedestrian safety and prevent product theft, making sure that unauthorized people or animals cannot enter the dock installation area. Refer to the Installation and Setup Manual for more information about the protective fence. When operating the dock on site, make sure that no flight task is being executed on DJI FlightHub 2 and the aircraft has landed inside the dock before entering the protective fence. After entering the area, make sure to press the dock emergency stop button.

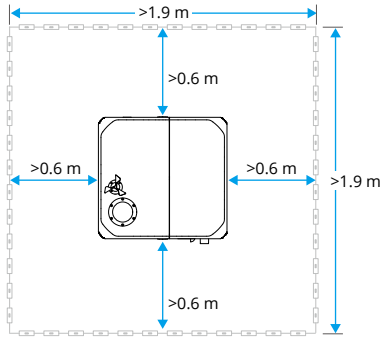

© 2026 DJI All Rights Reserved.

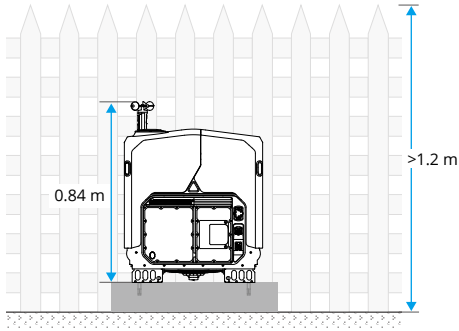

During the flight task, keep a distance of more than 10 m between the aircraft and users to ensure safety.

3.5 Entry/Exit Route

Takeoff Point: The position where the aircraft starts to fly the exit route after taking off from the dock.

Exit Point: The position where the exit route ends and the task route begins. After the task is completed, the aircraft first returns to the exit point and then returns to the dock along the exit route.

The entry/exit route is the flight path connecting the takeoff point, exit point, and dock. The aircraft flies from the takeoff point to the exit point along the entry route and waits for RTK convergence before continuing the task route; after the task is completed, it returns from the task route to the exit point, then follows the exit route to the dock to land.

Properly setting the entry/exit route helps the aircraft avoid surrounding obstacles during takeoff and landing.

The entry and exit routes are configured during dock deployment; for details, refer to the Installation and Setup Manual.

3.6 Pre-Flight Checklist

After creating or modifying a route, conduct an on-site flight test first. Monitor the video feed throughout the test, and begin routine operations only after confirming that the equipment and test flight are normal.

 © 2026 DJI All Rights Reserved.

1. Make sure to follow the checklist before leaving in the Quick Installation Guide to complete the on-site check.
2. Check the following in DJI FlightHub 2 before a flight task:
   A. Make sure the firmware of all devices (dock, aircraft, ground station, accessories, etc.) has been updated to the latest version.
   B. The dock, aircraft, and ground station are in normal status, and no abnormal prompts are displayed in DJI FlightHub 2.
   C. The dock wind speed, ambient temperature, and rainfall are suitable for operations, and the network connection is normal.
   D. The aircraft has enough battery power, and the GNSS signal is strong.
   E. The RTK is calibrated, and the alternate landing site and alternate route altitude are set.
   F. The minimum RTH altitude (relative to the dock) has been set. It is recommended to set it properly based on the height of the tallest obstacle in the operation area.
   G. Set the signal lost action: Flight route tasks can be set to continue the task or execute RTH. When the control signal is lost, the aircraft performs the selected action.
   H. The flight route setup is complete.
   I. The obstacle sensing of the aircraft is enabled.
   J. Set operation parameters, such as altitude and distance limits, as needed. Make sure flight altitude and RTH altitude are at least 5 m below the altitude limit, and that the flight and RTH paths are free of obstacles.
   K. Pay attention to the aircraft battery level during flight. DO NOT cancel the low battery RTH.
   L. The Flight Termination System (FTS) is built into the aircraft and is available when the aircraft is powered on. Before takeoff, make sure the aircraft's 4G connection is stable. FTS can be triggered via DJI FlightHub 2 or the FTS web page and cannot be triggered if the network connection is interrupted.
3. Divide the airspace for flight when multiple aircraft are operating simultaneously in order to avoid collisions during flight.

When multiple aircraft operate around the same dock (e.g., shift handover or grid collaboration), the aircraft broadcast their position information via Remote ID, and the system automatically plans the flight sequence of each aircraft to maintain a safe distance during handover.

To ensure flight precision, when importing flight routes via DJI FlightHub 2, make sure the RTK signal source used by the route is the same as that used for dock

© 2026 DJI All Rights Reserved.

position calibration. Otherwise, the aircraft's actual flight trajectory will deviate from the route, preventing the expected task results and potentially causing a collision and crash.

3.7 Flight Operations

Flight Procedure

The user procedure in DJI FlightHub 2 and the dock's automatic operation procedure are shown in the figure below:

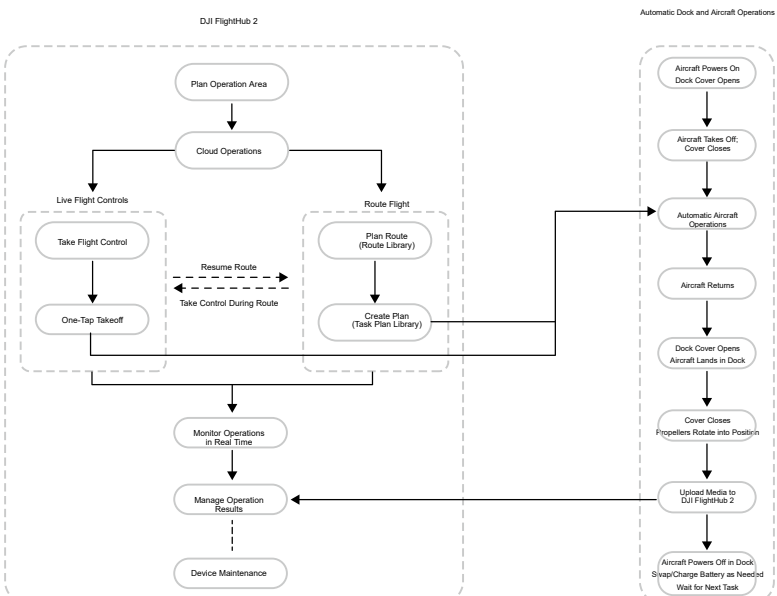

Visit https://fh.dji.com/user-manual/en/overview.html to read the DJI FlightHub 2 User Guide and learn more about DJI FlightHub 2 page features and usage.

Takeoff

The aircraft is operated via DJI FlightHub 2. Manual control of the aircraft using a remote controller is not supported.

 © 2026 DJI All Rights Reserved.

You can use Quick Takeoff in DJI FlightHub 2 in either of the following ways:

- Click **Virtual Cockpit** in the device status window and the aircraft will power on automatically, and click Takeoff.
- In the Task Plan Library, select a task with GNSS positioning accuracy and distribute it.

Planned and Manual Flight

Flight Route Tasks

Users can create routes and distribute tasks in DJI FlightHub 2. The specific procedure is as follows:

1. **Set Route: Before creating a task plan, set the route in the Route Library**. Enter the Route Library, click New Route, select the route type (Waypoint Route, Patrol Route, Area Route, Linear Route, Slope Route, Geometric Route, and Smart 3D Capture are supported), the aircraft, the model, and the payload, enter the route name, and click OK.

   Set the reference takeoff point, select the route icon and add waypoints, then set the route altitude mode, route speed, and other parameters, and save the route.
2. **Create Task Plan:** Select the configured route and devices, select the dock task accuracy mode and route planning task strategy, and set the signal lost action.

   The following types are available when creating a task plan:

   - **Single-Dock Task: The aircraft takes off from and lands on the same dock to complete the flight task**.
   - **Multi-Dock Task: The aircraft takes off from one dock and lands on another dock after completing the flight task**. Suitable for continuous operations over long distances and large areas.
3. **Check Multi-Dock Task Requirements**

   When selecting a multi-dock task, confirm the following requirements.

   - Multi-dock tasks support only two docks. For safe operation, keep the straight-line distance between them below 15 km.
   - If a single dock already in use is used to perform a multi-dock task, the ground station position must be re-calibrated.
   - Make sure the ground stations connected to the two docks performing the multi-dock task have completed RTK calibration during deployment: the satellite signal quality is "Excellent" and the calibration data sources are consistent. Otherwise, the aircraft position may drift abnormally during flight. Ground stations with Manual Calibration cannot use the roaming base station function and cannot perform multi-dock tasks.

© 2026 DJI All Rights Reserved.

- Multi-dock tasks support only high-precision RTK tasks.
- Live flight controls are unavailable during a multi-dock task.
- **After a multi-dock task is complete, pay attention to the following:**

  If an emergency landing occurs or the aircraft flies to the alternate landing site during the task, make sure to re-link the aircraft and the ground station before using it again. Make sure the landing dock and the aircraft are re-linked before leaving the site.

4. **Distribute tasks:**

Click the link or scan the QR code to watch the tutorial video.

https://enterprise.dji.com/dock-4/video

- Select the operation dock based on the flight routes and actual needs, and perform flight tests on the flight routes.
- When the operation distance is long or the environment is complex, it is recommended to enable Enhanced Transmission, or additionally configure a DJI O4 Ground Station and set it to Roaming Base Station Mode to achieve multi-station roaming.
- To minimize the effect of strong winds, consider lowering flight altitude as much as possible, provided the flight and RTH paths are free of obstacles, and keep RTH altitude equal to the route flight altitude.
- After distributing a task in DJI FlightHub 2, the dock will automatically check whether the environment (such as wind speed, rainfall, and temperature) and device status are suitable for flight tasks. If a warning message appears in DJI FlightHub 2, click the message to view warning details, and follow the instructions to conduct remote debugging.
- If the dock network is disconnected during a flight task, the task will be interrupted and RTH will be triggered.

 © 2026 DJI All Rights Reserved.

Terrain Follow

When collecting data in areas with large elevation differences, such as mountainous areas, Terrain Follow allows the aircraft to adjust the flight altitude following the changes in the terrain. Terrain Follow ensures that the relative height of the aircraft and the ground below remains unchanged so that the Ground Sampling Distance (GSD) of the photos collected in each area is consistent, improving the accuracy of mapping data while ensuring flight safety.

- Real-Time Terrain Follow can be enabled in the Flight Route Library .
- Select AGL for the Altitude Mode to enable Terrain Follow.

Real-Time Terrain Follow

During flight, the aircraft detects terrain fluctuations below in real time via the visual perception system to achieve terrain follow flight. When the environment and lighting meet the working conditions of the visual perception system and the terrain slope is less than 75°, the flight interface displays the terrain trend below the aircraft and the altitude above ground.

1. **Height above Ground Level (AGL)**
2. **Aircraft Velocity Direction**
3. **Flight Path**
4. **Terrain Trend Line**
5. **Max Altitude**

- To ensure flight safety, make sure that the obstacle avoidance of the aircraft is enabled when using terrain follow.
- When flying beyond the long-distance detection range of the vision system, Real-Time Terrain Follow cannot be performed. Fly with caution. Real-Time Terrain Follow cannot work in locations that feature cliffs, steep slopes, power lines, and towers.

© 2026 DJI All Rights Reserved.

- The vision system cannot work normally in low visibility. Real-Time Terrain Follow cannot be used normally in rain, snow, or fog.
- The vision system may not work properly over water. Therefore, the aircraft may not be able to actively detect the distance to the water for real-time terrain follow. It is not recommended to use real-time terrain follow in large areas of water and ocean waves.
- The vision system cannot detect surfaces without texture or work normally in insufficient or excessively strong light. It cannot work normally in the following situations:
  - Flying near monochrome surfaces (e.g., pure black, white, red, or green surfaces).
  - Flying near highly reflective surfaces.
  - Flying near water or transparent surfaces.
  - Flying near moving surfaces or objects.
  - Flying in an area with frequent and drastic lighting changes.
  - Flying near extremely dark (<10 lux) or bright (>40,000 lux) surfaces.
  - Flying near surfaces that strongly reflect or absorb infrared waves (e.g., mirrors).
  - Flying near surfaces without clear patterns or textures.
  - Flying near surfaces with repeating identical patterns or textures (e.g., tiles with the same design).
  - Flying near obstacles with small surface areas (e.g., tree branches and power lines).
- DO NOT interfere with the vision system in any way, and make sure its lenses are clear and free of stains.

Live Flight Controls

DJI FlightHub 2 supports remotely taking over and manually controlling the aircraft in the dock. In an emergency, trigger **Emergency Stop** or **RTH** in DJI FlightHub 2. Read https://fh.dji.com/user-manual/en/real-time-project-information/virtual-cockpit.html for detailed instructions.

In the FlightHub 2 virtual cockpit, users can press the X key to switch between high-speed mode and low-speed mode. The maximum flight speed is 15 m/s in high-speed mode and 5 m/s in low-speed mode. Users can switch freely as needed without other restrictions.

 © 2026 DJI All Rights Reserved.

- During flight, keep the DJI FlightHub 2 virtual cockpit displayed to view aircraft altitude and other flight information. Relative altitude (ALT) is measured from the takeoff point, and altitude (ASL) is relative to the EGM96 geoid.
- The aircraft is operated via DJI FlightHub 2. Plan emergency procedures accordingly.

During flight, the aircraft altitude and speed information displayed in the virtual cockpit is as follows.

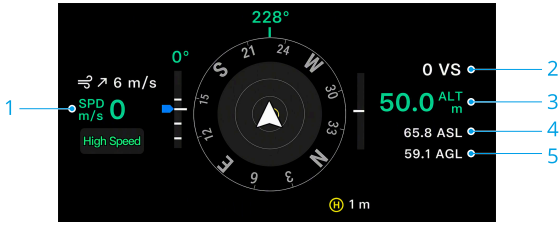

1. **Aircraft Horizontal Speed (SPD)**: Displays the current horizontal flight speed of the aircraft.
2. **Aircraft Vertical Speed (VS)**: Displays the current vertical speed of the aircraft.
3. **Relative Altitude (ALT)**: Displays the altitude of the aircraft relative to the takeoff point.
4. **Altitude (ASL)**: Displays the aircraft altitude relative to the EGM96 geoid.
5. **Height above Ground Level (AGL)**: Displays the height of the aircraft above the ground below.

3.8 Return to Home

Read this section carefully to familiarize yourself with the aircraft behavior during RTH.

The aircraft supports the Return to Home (RTH) function. After the flight task is completed, the aircraft will automatically return and land. During flight, RTH can also be triggered in the following ways: user-triggered, low battery, and failsafe (video transmission signal loss). If the aircraft records the Home Point successfully and the positioning system is functioning normally, when the RTH function is triggered, the aircraft will automatically fly back and land at the Home Point.

© 2026 DJI All Rights Reserved.

- To avoid RTH route deviation, if the dock or the positioning reference device has been moved, clear the original calibration data and re-establish the Home Point before flight.

Notice

- Normal RTH may not be possible when positioning is poor. If positioning is poor during Failsafe RTH, the aircraft enters ATTI mode and lands automatically.
- DO NOT fly over water, glass buildings, or at altitudes above 30 m when GNSS is unavailable. The aircraft will enter Attitude Mode if vision positioning is poor.
- The aircraft cannot avoid obstacles during RTH if environmental conditions do not meet the sensing system requirements.
- Restricted Zones can affect automatic RTH and may prevent it from completing; avoid flying near them.
- The aircraft may not be able to return to a Home Point if the wind speed is too high. Fly with caution.
- Use the **Preset** RTH route if there are power lines, transmission towers, or other obstacles that the sensing system cannot avoid on the RTH path, and make sure the set RTH altitude is higher than those obstacles.
- If the max altitude is adjusted below the current altitude during RTH, the aircraft will descend to the max altitude first and then continue returning to home.
- The RTH Altitude cannot be changed during RTH.
- If there is a large difference between the current altitude and the RTH altitude, the amount of battery power used cannot be calculated accurately due to wind speed differences at different altitudes. Pay extra attention to the battery power prompts and warning prompts in DJI FlightHub 2.
- If the aircraft reaches the altitude limit at its current location or at the Home Point while ascending during Preset RTH, it stops ascending and returns to the Home Point at its current altitude. Pay attention to flight safety during RTH.
- If the Home Point is within the Altitude Zone but the aircraft is not in the Altitude Zone, when the aircraft reaches the Altitude Zone it will descend below the altitude limit, which may be lower than the set RTH altitude. Fly with caution.
- The battery estimate for low battery RTH does not account for strong winds reducing RTH speed. At wind speeds of 10 m/s or higher, the aircraft may be unable to return because RTH speed is limited. During low battery RTH, the aircraft still climbs to the set RTH altitude, increasing risk in strong winds, so fly cautiously.

 © 2026 DJI All Rights Reserved.

- During nighttime RTH, the aircraft retraces its route to an open area before climbing and brakes when it encounters obstacles. If it is in a recessed structure, it may be unable to continue RTH. During daytime RTH, it uses the visual map to retrace its path to an open area above before climbing and uses millimeter-wave radar to bypass small obstacles.
- The minimum RTH altitude is 2 m, but 2 m is suitable only for high-precision RTK routes. When the RTH altitude is below 5 m, aircraft RTK must be in FIX status; otherwise, takeoff is not possible. For low-altitude operations in complex environments, set hazardous route segments and place the route start and end points directly above the dock. DO NOT use breakpoint resume in this mode, as it may cause abnormal climbing or detours during RTH.
- The aircraft will exit Advanced RTH if the surrounding environment is too complex for the system to complete, even if the sensing system is working properly.
- RTH cannot be triggered during auto landing.

Advanced RTH

When Advanced RTH is triggered, the aircraft will automatically plan the best RTH path to perform Advanced RTH. The planned path will be displayed on the map and adjusted in real time according to the environment. During RTH, the aircraft will intelligently adjust the flight speed according to environmental factors (such as wind speed, wind direction, and obstacles), and actively adjust the aircraft heading and RTH altitude according to the wind speed and direction for active wind resistance.

The user can cancel RTH after gaining aircraft control in DJI FlightHub 2.

⚠
- When the aircraft is used with the dock to perform a flight route task, it cannot take off if there is no GNSS signal. If the GNSS signal becomes weak during flight, the flight route task will be interrupted and RTH will be triggered.
- Set waypoints with obstacles above them as No-Return Points to ensure flight safety during RTH.
- Even when environmental and lighting conditions meet the vision system requirements, the aircraft exits automatic RTH if the surroundings are too complex to complete it.
- When the lighting is insufficient and the environment does not meet the vision system working conditions, the aircraft cannot avoid obstacles during RTH.
- In rainy or foggy weather, the vision system is unavailable and the RTH route may be inaccurate, which can cause flight safety risks. Avoid flying when it is rainy, smoggy, or the visibility is lower than 100 m.

© 2026 DJI All Rights Reserved.

- The minimum RTH altitude can be set to 2 m. Pay attention to the following when flying at low altitudes:
  - When the RTH altitude or safe takeoff altitude is less than 15 m, the flight risk is high and the task accuracy can only choose RTK.
  - Make sure to set the waypoint altitude, safe takeoff altitude, and RTH altitude to the same value in DJI FlightHub 2.
  - When the set RTH altitude is less than 15 m, ensure the aircraft RTK is FIX before operations. Otherwise, the aircraft cannot take off.
  - When flying where flight height is restricted and the set RTH altitude is below 15 m, mark all route waypoints as no-return points and place the first and last waypoints directly above the dock. Otherwise, triggering RTH midway may cause the aircraft to climb automatically for obstacle avoidance or terrain obstacles, creating a high flight risk.
  - When flying at low altitudes, DO NOT enable Resume Flight from Breakpoint. Otherwise, the aircraft may climb unexpectedly or deviate from the flight route.

Trigger Method

The user actively triggers RTH

During flight, RTH can be triggered in the DJI FlightHub 2 Device Status Window or the virtual cockpit. After RTH is triggered, the aircraft performs RTH according to the current environment, positioning status, and the configured RTH route. Users can take over aircraft control and cancel RTH in DJI FlightHub 2.

Aircraft low battery

During flight, if the aircraft determines that the current battery level is only sufficient to complete RTH, DJI FlightHub 2 prompts RTH and starts a 10-second countdown. When the countdown ends, the aircraft automatically initiates low battery RTH. Users can cancel RTH during the countdown.

If you cancel low battery RTH and continue flying, the aircraft is forced to descend when the remaining charge is only sufficient for landing; this cannot be cancelled.

⚠
- When the Intelligent Flight Battery level is too low and there is not enough power to return home, land the aircraft as soon as possible. Otherwise, the aircraft will crash after the battery power is completely depleted.
- DO NOT keep accelerating during auto landing. Otherwise, the aircraft will crash after the battery power is completely depleted.

 © 2026 DJI All Rights Reserved.

Loss of Control Signal

If the aircraft's signal lost action is set to RTH, the aircraft will enter Failsafe RTH when the control signal is lost during flight.

When the environment and lighting are good and meet the working conditions of the vision system, the aircraft will return using the Advanced RTH process according to the configured RTH route. During RTH, if the control signal is restored, the aircraft will continue RTH, and DJI FlightHub 2 will update the planned RTH path.

When environmental and lighting conditions are unsuitable for the vision system, the aircraft brakes, then follows this Original Route RTH procedure:

- If the RTH distance (the horizontal distance between the aircraft and the Home Point) is farther than 50 m, the aircraft adjusts its orientation and flies backward for 50 m on its original flight route before entering Preset RTH.
- If the RTH distance is greater than 5 m but less than 50 m, the aircraft adjusts its orientation and flies horizontally in a straight line to the Home Point at its current altitude.
- If the RTH distance is less than 5 m, the aircraft will fly above the dock and land.

⚠ If the OcuSync video transmission is obstructed and disconnects, considering there may be large obstacles on the RTH route, the RTH route will use the historical flight path as a reference to ensure RTH safety. If the aircraft relies only on 4G enhanced transmission, pay more attention to the battery status and the RTH route on the map.

RTH triggered by video transmission signal loss

During flight, when the video transmission signal is lost, the aircraft will trigger RTH after user confirmation.

RTH Procedure

After Advanced RTH is triggered, the aircraft brakes, then performs RTH according to the user-configured route (Optimal or Preset). Refer to RTH Settings for more information.

Terrain Data

Users can tap on the DJI FlightHub 2 project page to enter the Map Task Area and enable **Terrain Obstacles**, and distribute the terrain obstacle data to the aircraft in the dock via the cloud. Based on the terrain data, the aircraft automatically plans the optimal flight path for RTH, bypassing obstacle models along the way to ensure flight safety.

When terrain data is enabled:

© 2026 DJI All Rights Reserved.

- If the environment or lighting conditions are suitable for the vision system, the aircraft will automatically plan an optimal flight path based on the terrain data and the data collected by the vision system. The optimal flight path will maintain a safe distance from the terrain obstacles.
- If the environment or lighting conditions are not suitable for the vision system, only the terrain data is effective. Safety risks may arise if the model data is inaccurate.

Based on the terrain data, the aircraft will bypass the area that has weak GNSS signal to ensure aircraft positioning accuracy. If there are suspended models in the terrain data, such as cranes, power lines, and bridges, the aircraft will try to bypass the obstacles by flying above the objects.

When the aircraft is using GNSS for positioning, the positioning accuracy is relatively low, and the obstacle bypassing performance may be affected. Users should fly with caution, and pay close attention to the flight route and the camera view.

No-Return Points

Waypoints with obstacles above them can be marked as no-return points on waypoint routes to ensure safe RTH in complex environments.

The no-return waypoint and its adjacent route segments are hazardous segments (red in the illustration); if automatic RTH is triggered within them, the aircraft follows the route out of the no-return area before beginning upward RTH (yellow in the illustration).

 © 2026 DJI All Rights Reserved.

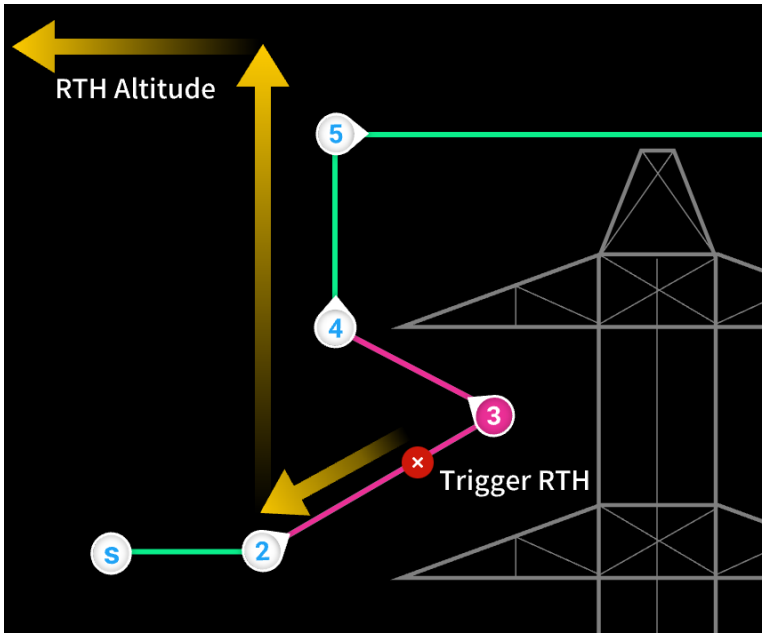

- Make sure there are no obstacles above regular waypoints adjacent to a no-return point, and maintain a clear passage more than 3 m in diameter along the route. Obstacles may cause task failure or abnormal RTH, and a forced low battery landing is triggered when the battery is too low.
- During the safe RTH process, the aircraft will exit the RTH process and land automatically when the aircraft battery is only sufficient to descend from its current altitude.
- During safe RTH, when the aircraft arrives above the Home Point and its horizontal distance from the Home Point is less than 0.5 m, it enters the landing phase.

RTH Settings

RTH settings are available for Advanced RTH. **Optimal Route Planning** can be enabled under Live Flight Controls in DJI FlightHub 2 before takeoff. Alternatively, enable **Optimal Route Planning** in the Task Plan Library in DJI FlightHub 2.

- **Optimal:**

© 2026 DJI All Rights Reserved.

- If the lighting is sufficient and the environment is suitable for the vision system, the aircraft adjusts its flight height intelligently according to environmental factors such as obstacles, wind speed, and video transmission signals. The configured RTH altitude does not take effect at this time. This optimal RTH path is shorter, saving battery power and extending flight task time.
- If the lighting is insufficient or the environment is not suitable for the vision system, the aircraft will perform Preset RTH based on the RTH Altitude setting.

- **Preset:**

RTH Distance/Altitude		Suitable Lighting and Environment Conditions	Unsuitable Lighting and Environment Conditions
RTH distance > 50 m	Current altitude < RTH altitude	The aircraft will plan the RTH path, fly to an open area while bypassing obstacles, ascend to the RTH Altitude, and return to home using the best path.	The aircraft will ascend to the RTH altitude, and fly to the Home Point in a straight line at the RTH altitude. [1]
	Current altitude ≥ RTH altitude	The aircraft will return to home using the best path at the current altitude.	The aircraft will fly to the Home Point in a straight line at the current altitude.

 © 2026 DJI All Rights Reserved.

RTH Distance/Altitude	Suitable Lighting and Environment Conditions	Unsuitable Lighting and Environment Conditions
RTH distance is within 5-50 m	The aircraft will fly to the Home Point in a horizontal straight line at the current altitude.	If the current altitude is higher than the set RTH altitude, the aircraft flies horizontally in a straight line toward the Home Point at the current altitude. If the current altitude is lower than or equal to the set RTH altitude, the aircraft first ascends to the set RTH altitude and then flies horizontally in a straight line toward the Home Point.
RTH distance < 5 m	Regardless of whether the environment and lighting meet the vision system working conditions, the aircraft moves above the dock and then lands on the dock.	

[1] If the LiDAR detects an obstacle ahead, the aircraft will ascend to avoid it and stop climbing once the path ahead is clear before continuing RTH. If the obstacle height exceeds the altitude limit, a prompt indicating obstacle sensing failure will appear in DJI FlightHub 2. Take over the aircraft in DJI FlightHub 2 and fly with caution.

The RTH plans for different environments, RTH trigger methods, and RTH settings are as follows:

RTH Trigger Method	Suitable Lighting and Environment Conditions (The aircraft can bypass obstacles and GEO zones)	Unsuitable Lighting and Environment Conditions
The user actively triggers RTH	The aircraft performs RTH according to the selected route: • Optimal: • Preset:	Preset **(The aircraft can ascend to bypass obstacles and GEO zones)**
Aircraft low battery		
Loss of Control Signal		**Original route RTH, Preset RTH will be executed when the signal is restored (The aircraft can ascend to bypass obstacles and GEO zones)**

© 2026 DJI All Rights Reserved.

If the entry/exit route is set, the aircraft targets the exit point during RTH. The aircraft first returns to the exit point according to the configured RTH mode, and then returns along the entry/exit route. In Optimal mode, the aircraft automatically plans the optimal RTH route. In Preset mode, the aircraft first reaches the set altitude and plans the RTH route while maintaining that altitude as much as possible.

Dock Landing Detection

During RTH to the dock after arriving above the Home Point with a horizontal distance to the Home Point of less than 0.5 m the aircraft enters the landing phase. When the aircraft is above the dock, dock landing detection activates.

The aircraft behaves as follows:

1. If dock landing detection determines the dock is suitable for landing, the aircraft will land on the dock directly.
2. If the dock is not suitable for landing (the dock cover fails to open, emergency stop button is pressed), the aircraft will fly to the alternate landing site.
3. If the aircraft cannot determine whether it can land at the dock, such as when the dock and aircraft are disconnected, it descends to 5 m above the ground and hovers, then enters alternate landing when the battery is low.

⚠ If no alternate landing site is set, the aircraft hovers and performs a forced landing when the battery level is too low. Make sure to set an alternate landing site when installing and configuring the dock. Otherwise, a forced landing may damage the equipment.

After the aircraft lands, the dock cover closes, and the aircraft is charged or the battery is swapped. Before the aircraft powers off, media files are automatically uploaded to the cloud.

3.9 System Shutdown

After completing a flight task, the aircraft will land on the landing pad, the dock cover will close and the dock will charge the aircraft. The media files will be automatically uploaded to the cloud before the aircraft powers off.

 © 2026 DJI All Rights Reserved.

3.10 Post-Flight Check

1. Confirm that the aircraft has landed inside the dock and the dock cover has closed properly.
2. Make sure that media files have been uploaded to the cloud automatically and can be captured normally during flight.
3. View the alert details of the dock and aircraft in DJI FlightHub 2.
4. Check whether there are any error messages in DJI FlightHub 2.
5. Check whether the aircraft can power off normally and be charged by the dock.
6. Check whether the dock is working normally.

3.11 Image Transfer and Export

When used with the dock, media files are automatically uploaded to the DJI FlightHub 2 media library via the dock after the aircraft completes the task (even if the aircraft is connected to a 4G network).

After Enhanced Transmission is enabled, if the OcuSync link between the aircraft and the ground station is disconnected, media files are uploaded directly to the DJI FlightHub 2 media library via 4G Enhanced Transmission.

After media files are uploaded successfully, the device automatically deletes the local files.

© 2026 DJI All Rights Reserved.

4 Emergency Procedures

4.1 Fire

The emergency procedures in this section were developed, tested, and considered adequate by DJI. They provide guidance for responding to aircraft emergencies. Operators should incorporate them into their overall operations manual and emergency response plan as required by applicable regulations.

A prompt will appear in DJI FlightHub 2 and the flight controller will reduce the power of the aircraft when the Intelligent Flight Battery temperature is too high. The battery will be locked for future use if the temperature is too high during flight and cannot be used again after landing.

Follow the instructions below if the Intelligent Flight Battery catches fire:

1. If the battery catches fire when it is being charged using a charging device, make sure that personal safety is guaranteed, power off the charging device immediately, and disconnect the battery from the charging device. If the battery catches fire when the battery is in the aircraft, make sure that personal safety is guaranteed and remove the battery from the aircraft immediately.
2. Move the flammable materials surrounding the battery to a safe distance of more than 5 m .
3. If the fire is controllable, use a large amount of sand to cover the location of the fire and pour cold water to cool the battery until there is no smoke coming out. Use fire-resistant gloves or other protective tools to avoid direct contact with the battery. Move the battery to a container with an appropriate amount of salt solution, and then fully immerse the battery in the solution. Leave the container in a cool place for more than 72 hours to fully discharge the battery then remove and dispose of the battery.
4. If the fire is uncontrollable, make sure that there are no flammable materials surrounding the battery, extend the safety distance to more than 10 m, and evacuate people from the surrounding area. Wait until the battery burns out and the fire is extinguished to prevent further accidents.

4.2 Loss of C2 Link

If the control signal is lost during flight, the aircraft performs the signal lost action. In Live Control, it executes RTH approximately 17 seconds after the control signal is lost. Refer to the Loss of Control Signal section for more information.

 © 2026 DJI All Rights Reserved.

4.3 Loss of Navigation Systems

When using fixed RTK positioning, the aircraft switches to GNSS if RTK becomes unavailable during flight.

4.4 Control Station Failures

Loss of Control Signal

If the control signal is lost during flight, the aircraft will perform signal lost action. Refer to the Loss of Control Signal section for more information.

DJI FlightHub 2 Failure

If DJI FlightHub 2 crashes during automatic operations while the control signal is normal, the C2 link between the aircraft and the control station is still in good condition, so the aircraft will continue performing the current operation until RTH is triggered by low battery level.

Alternate Landing

During automatic RTH, if the aircraft determines that it cannot land at the dock, it enters alternate landing. It flies above the alternate landing site at the alternate transfer altitude, then lands. In DJI FlightHub 2, go to **Devices** > **Dock/Ground Station** > **Device Maintenance** to view the set alternate transfer altitude.

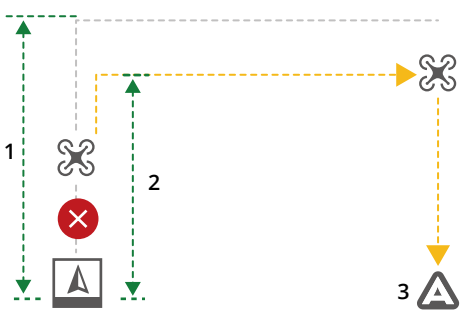

1. RTH Altitude
2. Alternate Route Altitude
3. Alternate Landing Site

- To ensure the path of the aircraft flying to the alternate landing site is free of obstacles, make sure to set a suitable alternate landing site and alternate route altitude when installing and configuring the dock. The alternate landing site must be within 1 to 50 m of the dock.

© 2026 DJI All Rights Reserved.

- It is recommended to use V-shaped icon with single-color background for alternate landing site marking. Otherwise, visual recognition may be affected, reducing landing accuracy

Emergency Stop Button

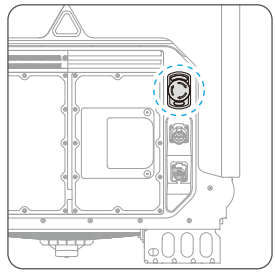

During device maintenance or debugging, press the emergency stop button in an emergency to stop the moving mechanisms of the dock and ensure personal safety. After the emergency stop button is pressed, the dock cover status indicator blinks red and yellow alternately.

If the aircraft motors have not started, the aircraft in the dock cannot perform flight tasks after the emergency stop button is pressed. If the emergency stop button is pressed after the aircraft takes off, the aircraft interrupts the flight task and hovers. You can click the RTH button in the DJI FlightHub 2 virtual cockpit, and the aircraft will fly to the alternate landing site. If the emergency stop button is pressed during landing, the aircraft flies to the alternate landing site to land.

Rotate the button clockwise to release the emergency stop button before performing any dock operations (e.g., dock cover control).

Other Failures

Troubleshoot other dock failures, such as loss of power or network connection or failure to open the dock cover. If dock AC power is disconnected, aircraft batteries in the battery compartment with more than 10% charge automatically power the dock, with approximately 4.5 hours of backup time per battery, to keep the device online and allow the aircraft to return safely. Charging, air conditioning, and wind speed gauge heating are unavailable during a power outage. Restore power as soon as possible.

 © 2026 DJI All Rights Reserved.

4.5 Flyaway

When the aircraft is connected to the dock, the coordinates of the aircraft will be uploaded to the cloud and can be viewed in DJI FlightHub 2.

When the aircraft is disconnected from the dock, the last recorded time and coordinates of the aircraft will be displayed in the device status window in DJI FlightHub 2. Users can click the information to center the aircraft location in the middle of the map and then right-click to create a PinPoint to help locate the aircraft during a search. The information will not be displayed after the aircraft re-connects to the dock.

In the European Economic Area, a flyaway event must trigger the Emergency Response Plan (ERP) as required by applicable regulations. Operators must prepare and activate their ERP in accordance with local regulatory requirements.

© 2026 DJI All Rights Reserved.

5 Handling, Servicing and Instructions for Maintenance

5.1 Storage

Dock Storage

If the dock is not used immediately, follow the requirements as shown below for temporary storage:

- Store it in a dry, rainproof, and fireproof place with no corrosive materials.
- Protect it from erosion and damage caused by wildlife.
- Make sure the outer packaging is in good condition and checked regularly.
- If the dock is removed from storage and not used for a period of time, place it in a water-resistant bag sealed with adhesive tape and then store it in the original packaging with a desiccant.
- DO NOT tilt or invert the dock or place items on top of the box when the dock is stored in the box.
- Make sure the protective covers of the dock AC power input port and PoE output port are in place to prevent dust and moisture from entering the ports. If the installed dock is left idle for an extended period, remove the aircraft from the dock for separate storage, and remove all batteries from the battery compartments. Package the aircraft properly and transport it separately.

Aircraft Storage

When the dock is operating, its air conditioning system adjusts temperature and humidity to provide suitable storage conditions. To store the aircraft separately, remove it from the dock and follow these requirements:

- Clean the aircraft and its parts regularly, and store them in an environment with a suitable temperature that is dry and cool.
- Store all small parts properly. Keep small parts, such as cables and straps, away from children and pets to prevent swallowing.

Battery Storage

When the dock is operating, its air conditioning system adjusts temperature and humidity to provide suitable battery storage conditions.

 © 2026 DJI All Rights Reserved.

Remove the battery from the aircraft if stored separately, refer to the Safety Guidelines and follow the instructions on battery storage.

Storing batteries at an appropriate charge level can extend their service life. The figure below shows the **Maximum Storage Period (Days, Y)** at different **Battery Levels (X)**.

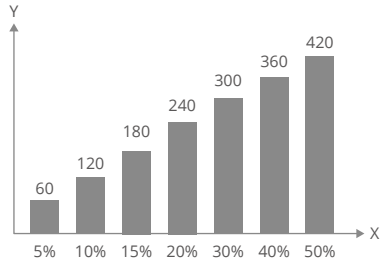

- The battery will be damaged once it exceeds the maximum storage period. The battery should no longer be used.
- The actual maximum storage period will vary slightly due to the batteries being part of different production batches and stored in different environments.
- The maximum storage periods are theoretical values calculated at room temperature. High-temperature storage significantly shortens both battery service life and the allowable storage period.

5.2 Intelligent Flight Battery

Notice

Before using the battery, carefully read and strictly follow DJI's requirements in this manual, the Safety Guidelines, the Maintenance Manual, and the stickers on the battery. Users are responsible for consequences caused by failing to follow these requirements.

1. The battery charging temperature range is 5°C to 45°C; charging outside this range will damage the battery.
2. A fully charged battery will automatically discharge when it is idle for a period of time. Note that it is normal for the battery to emit heat during the discharging process.
3. Check the battery level and cycle count regularly. Make sure to replace the battery with a new one if any of the following conditions is met: the battery has been in use for more than 12 months, the cycle count has exceeded 400, or the battery has

© 2026 DJI All Rights Reserved.

been stored in a high-temperature environment above 35°C for more than 100 days; otherwise, the user is responsible for any resulting equipment damage or third-party losses.

4. For safety, keep batteries at a low charge level during transport. Before transport, discharge them by flying to a low battery level, such as below 30%.
5. Over-discharge protection is enabled and discharging stops automatically to prevent over-discharge when the aircraft is idle. Charge the battery to wake it from over-discharge protection before using again. Over-discharge protection is not enabled during flight.
6. When transporting the battery, use suitable protective packaging to prevent impacts. If its surface is dented, cracked, or otherwise damaged, DO NOT continue using it and contact DJI Support.

Inserting/Removing the Battery

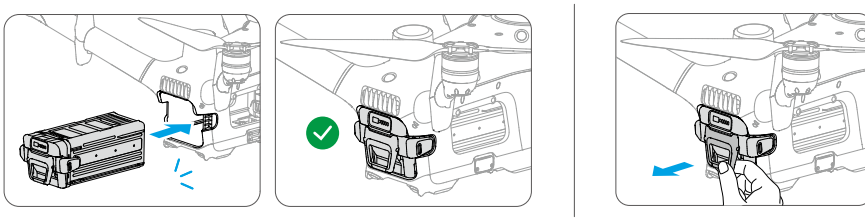

- DO NOT install or remove the battery while the aircraft is powered on.
- Make sure the battery is firmly mounted before takeoff. DO NOT launch the aircraft when the battery is not securely mounted, as this may cause poor contact between the battery and the aircraft and present hazards.

Aircraft Battery Swapping and Charging

After the aircraft lands and before takeoff, the dock automatically replaces or charges the battery according to the aircraft battery level and the task schedule.

Aircraft Battery Swapping

When the aircraft battery level is below 90%, a flight task is scheduled within 1 hour, and the battery level in the battery compartment is above 90%, the dock automatically replaces the aircraft battery.

To manually swap the aircraft battery, use either of the following methods.

 © 2026 DJI All Rights Reserved.

- On the Local Debugging page in the DJI Enterprise App, tap > **Battery Swap** > **Manual Swap** and follow the app instructions.
- On the Devices page in DJI FlightHub 2, click > **Dock Control** > **Manual Swap** and follow the on-screen instructions.

Aircraft Charging

If a flight task is scheduled within 2 hours, the dock charges the aircraft battery to 100% before the task starts. When there is no flight task, the dock maintains the aircraft battery level at approximately 95% via the wireless charging module.

To charge the aircraft battery to 100%, manually start charging in DJI FlightHub 2 using either of the following methods.

- Open the Project page, click > > **Action**, enable **Remote Debugging**, then click **Charge** to start charging the battery.
- Open the Devices page, click **Dock/Ground Station** > , enable **Remote Debugging**, then click **Charge** to start charging the battery.

- The dock intelligently selects the battery to swap based on the battery lifespan, battery level, and the usage count of the battery compartments.
- If the battery temperature is outside the charging temperature range, the dock will wait until the battery reaches a suitable temperature before charging, which extends the charging time.

- After the dock is powered on, DO NOT place anything other than the aircraft on the landing pad, including metal objects or electronic devices. When removing or placing the aircraft, DO NOT bring metal items, such as rings, near the pad or touch the pad directly, to avoid burns.
- To ensure safety, the dock cannot charge the aircraft battery when the dock cover is opened.

Checking the Battery Level

Press the power button once to check the current battery level.

The battery level LEDs show the Intelligent Flight Battery charge level during discharge; their indications are shown below.

LED is on

LED is flashing

LED is off

© 2026 DJI All Rights Reserved.

Blinking Pattern	Battery Level
● ● ● ●	92-100%
● ● ● ☼	76-91%
● ● ● ◎	63-75%
● ● ☼ ◎	51-62%
● ● ◎ ◎	38-50%
● ☼ ◎ ◎	26-37%
● ◎ ◎ ◎	13-25%
☼ ◎ ◎ ◎	1-12%

Checking the Battery Level via DJI FlightHub 2

There are two ways to check the battery information in DJI FlightHub 2

- Open the Project page and click > to open the device window or virtual cockpit and view battery level and status.
- Open the Devices page and click **Dock/Ground Station** > to open Device Maintenance and view battery level, temperature, cycle count, and other information.

Dock Warming

If the aircraft is powered off in a low-temperature environment, the dock will continuously supply power to keep the battery warm, meeting the need for immediate takeoff in cold regions. After charging is complete, if the aircraft is powered off in the dock with no flight task, the battery enters the keep-warm state and the battery temperature will be maintained above 15° C.

The battery will stop keeping itself warm when the user initiates an Immediate flight task, powers on the aircraft, or starts battery charging.

Conditioning Batteries

The Intelligent Flight Battery can intelligently detect its current health status. If a warning message appears in DJI FlightHub 2, click the message to view warning details, and follow the on-screen instructions.

When the battery is approaching the end of its service life, DJI FlightHub 2 prompts the user to replace it; when the life limit is reached, the dock may be unable to perform flight tasks. The battery supports up to 400 charge cycles. High-temperature storage affects

 © 2026 DJI All Rights Reserved.

battery service life; if cumulative storage above 35°C does not exceed 100 days within 12 months, the battery supports up to 400 charge cycles.

- The battery contains hazardous chemicals, DO NOT dispose of the battery in a regular waste disposal container. Strictly follow local laws and regulations regarding the disposal and recycling of batteries.
- If a battery is over-discharged, swollen, dropped, water-damaged, otherwise damaged, or leaking, DO NOT place it directly in a battery recycling bin; stop using it immediately and contact a professional battery recycling company for further handling.

5.3 Cleaning and Maintenance

Refer to the Maintenance Manual for information on cleaning and maintenance of the aircraft, dock, and their components.

© 2026 DJI All Rights Reserved.

6 Accessories

6.1 Accessories and Aircraft Endurance

The overall weight, power consumption, and flight time of the aircraft vary depending on the installed accessories and their working status. The specific data is shown in the table below:

Payload	Status	Weight (g)	Payload Power Consumption (W)	Max Hovering Time (min)	Max Flight Time (min)
No Payload	/	2600	0	55.37	59
Parachute	/	2747	0	51.65	55.3
Speaker	Disable	2828	0	49.76	53.31
	Enable		12	47.91	51.37
Speaker + Parachute	Disable	2935	0	47.44	50.7
	Enable		12	45.75	48.93
Spotlight	Disable	2755	0	51.46	55.1
	Enable		45	44.74	47.61
Spotlight + Parachute	Disable	2862	0	49.01	52.34
	Enable		45	42.87	45.55
Speaker + Spotlight	Disable	2943	0	47.27	50.53
	Enable		57	40.24	42.81
Speaker + Spotlight + Parachute	Disable	3050	0	45.13	48.12
	Enable		57	38.68	41.06

* Note: Maximum flight time is calculated at a flight speed of 15 m/s.

 © 2026 DJI All Rights Reserved.

6.2 DJI AL2D Spotlight and DJI AS2D Speaker

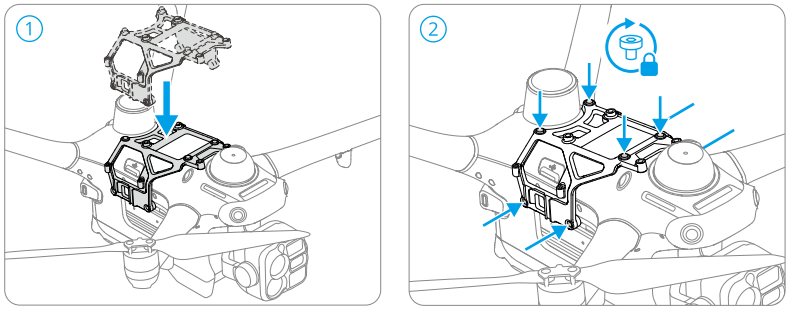

Accessory Bracket Installation

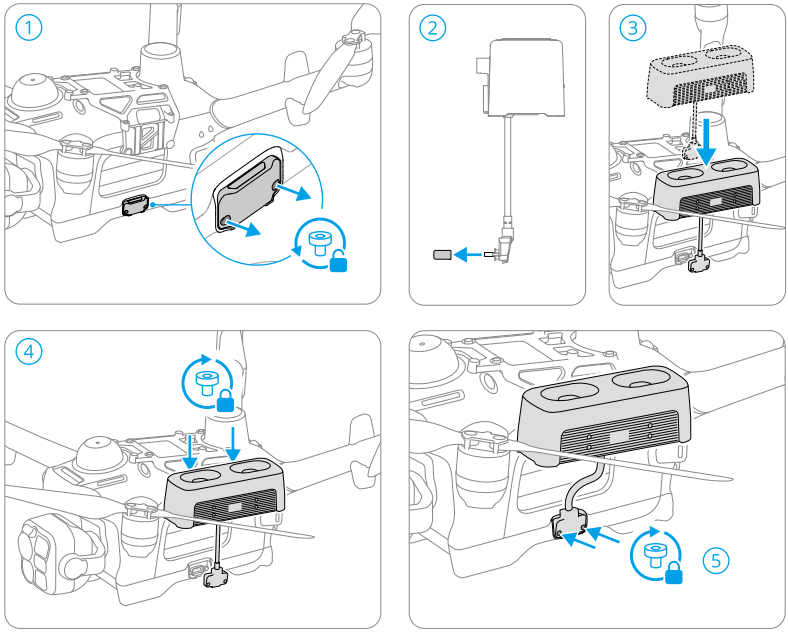

Speaker Installation

© 2026 DJI All Rights Reserved.

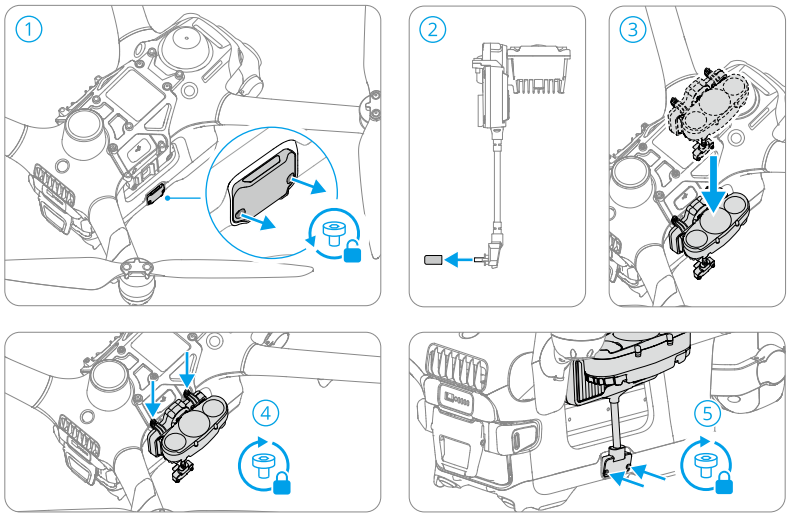

Spotlight Installation

Installation and Activation

1. Open the cover of the E-Port V3 Low-Speed Port.
2. Install the accessory bracket on the top of the aircraft and tighten the screws on the top and both sides.
3. Install the spotlight on the right side of the body and the speaker on the left side of the accessory bracket, and tighten the fixing screws on top.
4. Remove the protective cover of the accessory USB-C connector and connect the cable.
5. Power on the aircraft and make sure it is linked to the ground station.
6. Use a data cable to connect a phone with the DJI Enterprise App installed to the dock USB-C port.
7. When used for the first time, the App automatically displays an activation prompt. Follow the on-screen instructions to complete accessory activation.

⚠
- After removing the accessory, make sure to cover the accessory port with the original waterproof rubber plug of the aircraft and tighten the screws to ensure proper sealing and prevent water ingress into the port.
- During assembly, make sure the plugs are fully inserted. Avoid pulling the connection cables forcefully to avoid affecting the waterproof sealing of the ports or damaging the cables.

 © 2026 DJI All Rights Reserved.

- Calibrate the aircraft compass after installing the speaker for the first time or replacing it. When connected to the dock, tap **Debug Tools > Compass Calibration** on the Local Debugging page in the DJI Enterprise App and follow the prompts to calibrate. DO NOT touch or move the speaker during calibration, as this may affect calibration.
- DO NOT overtighten the screws to avoid stripping the threads or damaging the accessory mounting holes.
- Installing the spotlight or speaker may limit aircraft propulsion performance, vision system performance, and obstacle avoidance capabilities. Pay attention to flight safety.

- Keep the removed waterproof rubber plug of the USB-C connector properly for later reinstallation.
- Spare screws are included in the package. If screws are lost or worn during installation, replace them with the spare screws.
- The aircraft can be stored directly in the dock with accessories installed. When accessories are not in use, remove them before storage.

Spotlight Features

- **Select Mode:** Select the spotlight mode in the DJI FlightHub 2 virtual cockpit. The spotlight supports Lighting and Strobe modes; Lighting modes are Floodlight, Spotlight, All-light, and Auto, and Strobe modes are Slow and Fast. In Auto mode, Floodlight is used with the wide-angle camera, and Spotlight is used with the telephoto camera.
- **Adjusting Brightness: Drag the brightness slider to adjust the spotlight brightness**.
- **Gimbal Settings:** Enable gimbal linkage, fine-tune the gimbal angle, or calibrate the gimbal in the DJI FlightHub 2 virtual cockpit.

- DO NOT point the spotlight directly at people's eyes.
- It is recommended to enable the Electronic Dehazing function when using the spotlight in high-altitude environments to achieve better image quality.
- It is recommended to appropriately reduce the spotlight brightness and turn it on as needed to reduce the impact on the aircraft flight time.
- The spotlight may become hot after prolonged operation. Please be careful to avoid burns.
- DO NOT forcibly rotate the spotlight gimbal. Impacts may damage the product or cause it to malfunction. Handle it carefully and avoid dropping it.

© 2026 DJI All Rights Reserved.

Speaker Features

Enter the DJI FlightHub 2 Device Status Window or Virtual Cockpit to use real-time broadcasting, record & broadcast, text-to-speech, imported audio file playback, and route broadcast functions.

Click the link below or scan the QR code to watch the spotlight and speaker tutorial videos to learn about the accessory functions.

https://enterprise.dji.com/dock-4/video

- The speaker only supports playing audio files in AAC, MP3, and WAV formats, with a single file no larger than 10 MB.
- DO NOT use the speaker at close range or in urban areas with a high concentration of noise-sensitive buildings, as the loud sound could cause accidents or injuries.
- It is not recommended to play single-frequency sounds or sweep sounds to avoid irreversible damage to the speaker.
- During real-time broadcasting, stay close to the computer microphone, speak more slowly, and raise your voice for clearer audio.

6.3 DJI AP1 Parachute

Disclaimer

The parachute is designed as a supplementary safety device, intended solely for deployment in emergency situations where the aircraft experiences power failure, flight control malfunction, or exceeds a safe operating area. The purpose is to attempt to reduce the aircraft's descent speed, thereby seeking to reduce potential damage to the aircraft, payload, and ground personnel and property.

The actual effectiveness of this product may vary depending on factors such as flight altitude, descent speed, descent attitude, aircraft payload, environmental conditions (e.g., wind), deployment timing, and method of use. This product does not replace proper flight safety management, nor does it constitute a guarantee of any specific outcome, including but not limited to zero injury or zero loss.

 © 2026 DJI All Rights Reserved.

Before using this product, carefully read this user manual and watch the tutorial videos to receive sufficient training on the correct use of this product. Refer to Read Before Use and Video Tutorials for more information. Users must strictly follow the requirements set out in this user manual or other official guidelines to correctly install, configure, use, and maintain this product. DJI assumes no liability for any loss resulting from improper use, unauthorized disassembly, modification, repair, or non-compliant operation.

⚠ As a critical safety component, this product must be inspected before each flight and its condition must be evaluated periodically. Refer to Regular Inspection for details. If this product has experienced severe impact, water exposure, or any other event that may affect its performance, have it repaired or replaced promptly to ensure continued reliability.

Component Introduction

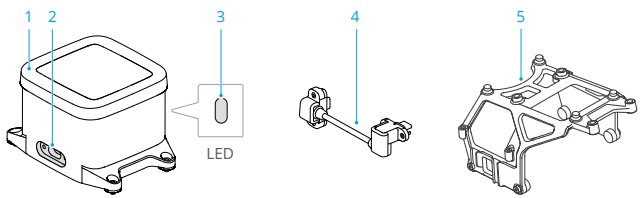

1. Parachute
2. USB-C Port
3. Status Indicator
4. Connection Cable
5. Bracket

Parachute Status Indicator Description

Normal Status		
·····	Blinks green intermittently	The parachute is functioning normally
·····	Blinks green slowly	The parachute has been deployed
—	Solid yellow	System initializing or firmware update in progress
Warnings and Anomalies		
·····	Blinks red intermittently	The communication link between the parachute and the aircraft is abnormal. You can power off the aircraft, reconnect the connection cable, and power it on again. If the issue persists, contact DJI Support.

© 2026 DJI All Rights Reserved.

·····	Blinks red slowly	The parachute is not activated
·····	Blinks red quickly	Parachute sensor error. You can restart the aircraft. If the issue persists, contact DJI Support.

First Use

Installation

- Before first use, make sure that the parachute exterior is intact with no signs of moisture or water ingress.
- Make sure that DJI Matrice 5TD is powered off before installing or removing the parachute. DO NOT overtighten the screws during installation. Stop when you feel significant resistance to avoid causing damage.
- The parachute bracket is a mechanical connecting part. Slight surface wear on the bracket during installation, removal, or rotation is normal.
- The parachute connection cable must only be connected to the USB-C Assistant Port (E-Port V3 High-Speed Port) on the aircraft. Route the cable properly before securing the cable clamp to avoid obstructing the aircraft's vision and sensing systems.

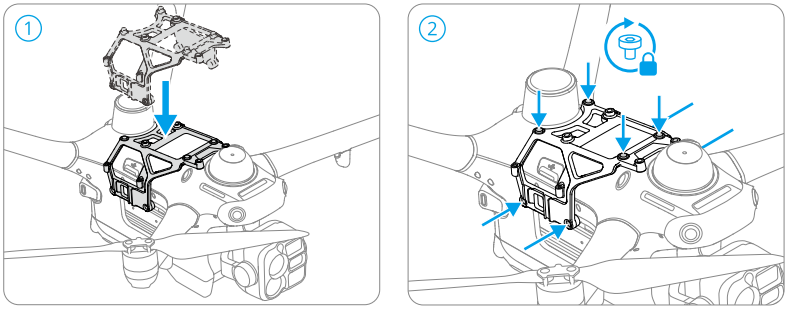

Accessory Mount Installation

 © 2026 DJI All Rights Reserved.

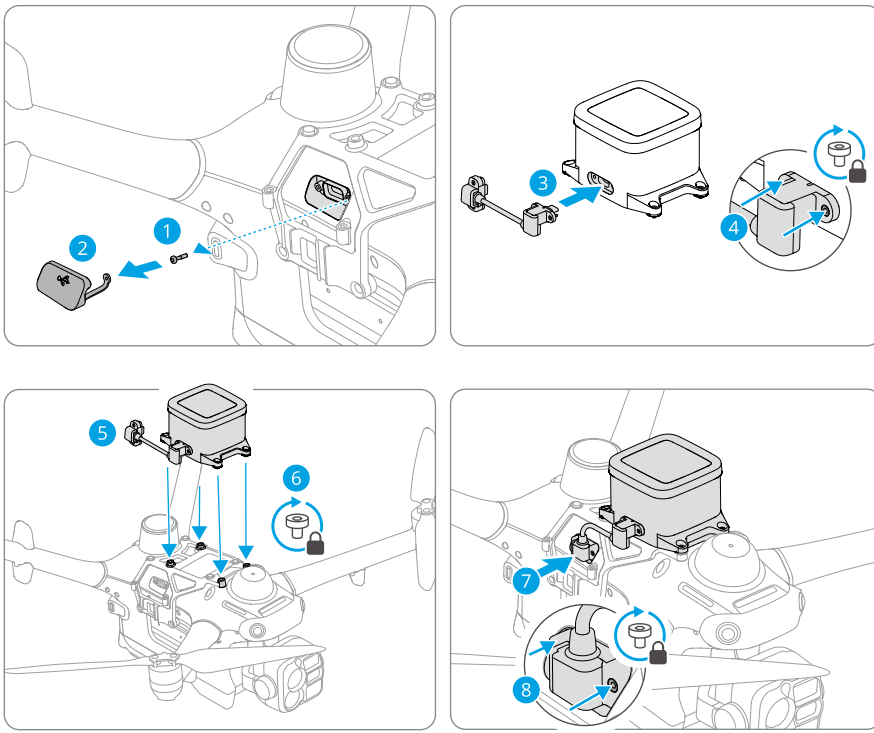

Parachute Installation Diagram

Activation

A new parachute must be activated using the DJI Enterprise App. Make sure the parachute is installed on the aircraft, then power on the aircraft, use a USB-C to USB-C cable to connect the dock to your phone, and follow the on-screen instructions in the DJI Enterprise App. Make sure the network connection is stable during activation.

Using the Parachute

- DO NOT disassemble the parachute body, connection cable, or other components without authorization.
- Keep the product away from fire or high-temperature environments and store it in a cool, shaded place.

© 2026 DJI All Rights Reserved.

- Before takeoff, check whether the propellers are damaged, deformed, or loose. Abnormal propellers may cause abnormal aircraft attitude or speed, which may trigger automatic parachute deployment. If any propeller abnormality is found, replace the propellers before takeoff.

- The parachute, connection cable, and bracket together weigh 147 g. Before takeoff, make sure that the aircraft's maximum take-off mass (MTOM) does not exceed 3050 g.
- To ensure successful parachute deployment and to avoid false obstacle sensing triggers during flight, the DJI Matrice 5TD will automatically adjust its sensing and obstacle avoidance capabilities after the parachute is installed. The top millimeter-wave radar will be disabled and the FOV angle of the rear and upper vision sensors will be adjusted. As a result, the ability of the DJI Matrice 5TD to avoid small obstacles from the rear and upper directions will be affected. Pay attention to the environment in these two directions during flight, and proactively avoid obstacles to ensure flight safety.

The minimum effective parachute deployment altitude is 35 m above ground level (AGL)*. The effective deployment altitude refers to the minimum AGL required for the parachute to slow the aircraft's descent rate to 6 m/s or below before it reaches the ground. If the deployment altitude is less than 35 m, the parachute may not fully deploy and slow the aircraft's descent. The parachute will not be triggered when the aircraft has not taken off.

* Measured in a wind-free environment at 25°C ambient temperature, at an altitude of 30 to 500 m above sea level, with the DJI Matrice 5TD taking off at the maximum mass of 3050 g. Data is for reference only. Results may vary under different environmental conditions, usage methods, and firmware versions. Refer to actual experience.

Automatic Deployment

- The parachute will deploy automatically when the aircraft attitude or speed is abnormal.
- The parachute supports the Flight Termination System (FTS) in certain regions. FTS can be used with the Geocaging function. Users can define a geocage boundary in DJI FlightHub 2. If the aircraft flies beyond the contingency volume boundary, FTS will be triggered, the motors will stop, and the parachute will be deployed.

- In regions that support the Flight Termination System (FTS), go to Devices in DJI FlightHub 2, click , and make sure that DJI Flight Termination System is displayed as online on the aircraft card. DO NOT start the operation until the FTS status is confirmed.
- To reduce the risk of damage to nearby equipment or property caused by close-range parachute deployment, the parachute will not be automatically deployed under the following conditions when the aircraft attitude or speed is abnormal:

 © 2026 DJI All Rights Reserved.

- The horizontal distance between the aircraft and the dock is within 10 m, and the relative altitude above the dock does not exceed 15 m.
- The horizontal distance between the aircraft and the dock exceeds 10 m, and the downward vision system is functioning properly, with the measured altitude above ground not exceeding 10 m.

Refer to the FAQ for information on countries and regions that support FTS.

Manual Deployment

In an emergency, choose one of the following methods to manually deploy the parachute:

1. **Stop the motors and deploy the parachute (applicable to operations in all regions):** After entering a project in DJI FlightHub 2, project members can view device information in the left panel and open the device status window, then click **Deploy Parachute** to deploy the parachute. Alternatively, enter the virtual cockpit, click , and swipe right to deploy the parachute.
2. **Trigger FTS to stop motors and deploy the parachute (applicable to operations in countries and regions that support FTS):** In the virtual cockpit, click FTS . The page will redirect to the FTS web page with the SN and verification code automatically filled in. Confirm to trigger FTS and deploy the parachute.

   - As a backup method, if the virtual cockpit is inaccessible, visit https://fh.dji.com/fts/index.html on a device with internet access, and manually enter the SN and verification code to trigger FTS and deploy the parachute. To minimize response time in emergencies, prepare in advance: record the SN and verification code (available in DJI FlightHub 2 by going to Devices, clicking the device maintenance icon, and viewing the aircraft details), and keep the FTS web page open with the information pre-filled during operations for immediate FTS triggering when needed.

Before the parachute is deployed, the motors will stop. After deployment, the aircraft will continuously emit sound and light alarms. Refer to Post-Deployment Procedures to recover the aircraft and parachute.

Post-Deployment Procedures

After the parachute deploys normally, follow the steps below to retrieve the aircraft and parachute.

1. Check the location of the aircraft icon on the map in DJI FlightHub 2 and estimate the drift range based on the flight altitude and wind speed, then proceed to the approximate landing area.

© 2026 DJI All Rights Reserved.

2. Locate the exact position of the aircraft with the help of the audible and visual alarm emitted by the aircraft.
3. Power off the aircraft.
4. Gather the parachute and fold the canopy.
5. Make sure that no components are left behind at the site.

- The parachute is a single-use device. Once deployed, it cannot be repaired or reused and must be replaced with a new one. If you have any dispute about the deployment trigger, export the logs using DJI FlightHub 2 or the DJI Assistant 2 configuration software and contact DJI Support, then send the parachute back for log analysis as instructed.
- After deployment, the aircraft may have sustained damage during the deployment, descent, or landing. Contact DJI Support to have the aircraft inspected. DO NOT continue using the aircraft until it passes the inspection.
- If the aircraft cannot be located, or if a collision or crash has occurred, refer to Handling Procedures for Flight Accident.

Regular Inspection

If the parachute has never been deployed and passes the daily self-checks, it does not require factory inspection within 3 years after activation. It is recommended to stop using the parachute 3 years after activation.

Additionally, perform the following inspections at least once every 6 months:

1. Make sure that the parachute shows no signs of damage, dirt, moisture, or water ingress, and that the protective cover is not loose.
2. Make sure that the parachute connection cable is undamaged, the connector is securely plugged in with no looseness, the aircraft port shows no corrosion, the port screws are securely fastened, and the connection cable does not obstruct the aircraft's vision and sensing systems.
3. Make sure that the bracket screws show no corrosion or damage, and that the parachute is securely mounted with no looseness.
4. After powering on, make sure that the parachute status indicator displays normally.

If any abnormality is found during the inspection, repair or replace the parachute promptly to ensure continued reliability.

 © 2026 DJI All Rights Reserved.

7 Appendix

7.1 Firmware Update

Using DJI FlightHub 2

1. Power on the dock, and make sure the aircraft is linked to the O4 ground station and the aircraft battery level is higher than 50%.
2. Open DJI FlightHub 2 and click **Devices** > **Dock/Ground Station**.
3. **In the firmware upgrade list, click To Update to view the firmware versions and update details required for the dock, aircraft, and O4 ground station**.
4. Select the checkboxes on the left to upgrade multiple docks, aircraft, and O4 ground stations in batches.
5. Click **Update**, and DJI FlightHub 2 will download the firmware automatically.
6. After the download is complete, DJI FlightHub 2 will update the firmware of the dock, aircraft, and O4 ground station simultaneously. If no aircraft is in the dock, only the firmware of the dock and O4 ground station will be updated.

⚠
- Make sure the dock is connected to the internet during the whole update process.
- The battery installed on the aircraft will also be updated to the latest firmware version during the update.
- The devices are unavailable during the update. They become available again after the update completes.
- The aircraft firmware includes the accessory firmware. After the accessory is installed on the aircraft, it can be upgraded together with the aircraft firmware via DJI FlightHub 2. Before upgrading, make sure the accessory is connected to the aircraft and the device battery level is sufficient.
- During the firmware update process, it is normal for the gimbal to go limp, the aircraft status indicators to blink, and the aircraft to reboot. Wait patiently for the firmware update to complete.
- For safety, make sure you are using the latest firmware version.
- Make sure the dock, aircraft, O4 Ground Station, O4 roaming station, and accessories are all updated to compatible firmware versions.

© 2026 DJI All Rights Reserved.

Upgrading with DJI Assistant 2 (Enterprise Series)

1. Connect the DJI device to a computer separately, as the DJI Assistant 2 does not support updating multiple DJI devices at the same time.
2. Make sure the computer is connected to the internet and the DJI device is powered on.
3. Launch DJI Assistant 2 and log in with a DJI account.
4. Click **Firmware Update** on the left side of the main interface.
5. Select the firmware version and click to update. The firmware will be downloaded and updated automatically.
6. When the "Update successful" prompt appears, the update is completed, and the DJI device will restart automatically.

Notices

- DO NOT remove accessories or turn off the devices during the update process.
- The battery firmware is included in the aircraft firmware. Be sure to update all batteries.
- During the update process, it is normal for the gimbal to go limp, the aircraft status indicators to blink, and the aircraft to reboot. Wait patiently for the update to complete.
- Make sure to keep the aircraft away from people and animals during a firmware update, system calibration, or parameter configuration.
- For safety, make sure you are using the latest firmware version.
- Read the *Release Notes* carefully before updating to learn about the update content and precautions.
- The aircraft firmware includes the parachute firmware. After the parachute is installed, its firmware can be updated with the aircraft firmware via DJI FlightHub 2. Before updating, make sure the parachute is connected to the aircraft and the device has sufficient battery power.
- Make sure the device has sufficient power before updating the firmware.

Visit the following link and refer to the *Release Notes* for firmware update information:

https://enterprise.dji.com/dock-4/downloads

 © 2026 DJI All Rights Reserved.

7.2 Expansion Port

The following ports support SDK extension, allowing developers to integrate more functions:

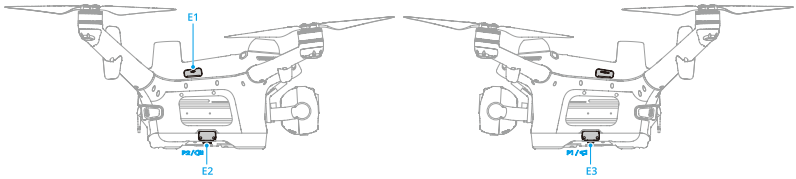

- E1: USB-C Assistant Port (E-Port V3 High-Speed Port).
- E2, E3: E-Port V3 Low-Speed Port

Visit https://developer.dji.com for more information about SDK development and instructions.

Installation Requirements

- The device supports installing official payloads (such as the speaker, the spotlight, and the parachute). Refer to the Accessories chapter for detailed installation and usage instructions. After installing a payload, the aircraft vision system performance and obstacle avoidance capability will be limited. Pay attention to flight safety. The aircraft compass must be re-calibrated after installing or replacing the speaker.
- Installing payloads will shorten the flight time and reduce the aircraft wind resistance. Make sure to install the payload as needed. Refer to the accessory user guide for more information.
- Make sure the payload is securely installed. Prevent a loose payload from compromising device protection or falling during flight.
- If installing both the parachute and the spotlight, make sure to install the parachute first and then the spotlight.

Third-Party Payload Requirements

- Installing a third-party payload may affect the aircraft performance (such as video transmission, GNSS, and obstacle avoidance) and flight safety. It is recommended to use official payloads or the payloads in the Enterprise Ecosystem Solution Catalogue. The payload size and installation height must meet the payload structural design standards. Visit https://developer.dji.com for more information.

© 2026 DJI All Rights Reserved.

- After installing a third-party payload, the maximum payload is 450 g, and the total weight of the aircraft must not exceed the officially labeled maximum takeoff weight.
- The third-party payload should have a protection rating equal to or higher than that of the aircraft to maintain reliable operation and preserve the service life of the device. It is recommended to test the water-resistant performance with the third-party payload installed on the aircraft to prevent water leakage from the payload port, which would seriously affect flight safety.
- After installing a third-party payload, make sure to perform a stability test. Make sure there is no interface disconnection, no impact on the GNSS satellite search of the aircraft, no degradation in video transmission performance, and no incorrect obstacle sensing.

 © 2026 DJI All Rights Reserved.

7.3 Using Enhanced Transmission

Enhanced Transmission combines OcuSync and 4G network transmission. When the OcuSync video transmission encounters interference or obstruction, or over long transmission distances, the aircraft can transmit the video transmission signal via the 4G network.

The aircraft has built-in dual 4G Enhanced Transmission modules. Each module supports eSIM or a nano-SIM card (either one) and supports dual-SIM dual-connection backup transmission.

eSIM is not supported overseas. Use a nano-SIM card.

- The nano-SIM card must be purchased separately.
- Enhanced Transmission consumes cellular data. If the aircraft transmits over 4G throughout the flight, the two cards used by the two Enhanced Transmission modules consume approximately 2.25 GB in total during 30 minutes of flight. This figure is for reference only; actual data consumption depends on usage.
- The 4G Enhanced Transmission service is only supported in certain countries and regions. Comply with local laws and regulations and the 4G Enhanced Transmission terms of service when using it.

SIM Card Installation and Enhanced Transmission Settings

Inserting the nano-SIM Card

If using a nano-SIM card, first insert a qualifying card into one of the two SIM card slots inside the aircraft E-Port. Open the waterproof rubber plug of the E-Port, insert the nano-SIM card with the chip facing down into the slot, and then close the waterproof rubber plug.

After installation, manually switch the card type to SIM on the DJI FlightHub 2 Remote Debugging page or in DJI Enterprise App.

© 2026 DJI All Rights Reserved.

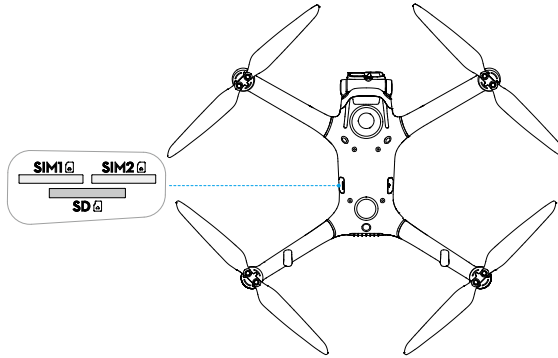

- It is recommended to purchase a nano-SIM card that supports a 4G network from official channels of the local mobile network operator.
- DO NOT use an IoT SIM card, otherwise the video transmission quality will be seriously compromised.
- DO NOT use a nano-SIM card provided by a virtual mobile network operator, otherwise the aircraft may be unable to connect to the internet.
- DO NOT cut the nano-SIM card by yourself, otherwise the nano-SIM card may be damaged. Rough edges of a cut card may prevent it from being inserted or removed properly.
- If a PIN code is set for the nano-SIM card, make sure to insert the nano-SIM card into a smartphone and disable the PIN code setting, otherwise the aircraft may be unable to connect to the internet.

To remove the nano-SIM card, open the waterproof rubber plug, gently press the nano-SIM card to partially eject it, and then take it out.

Enhanced Transmission Settings

The configuration steps are as follows:

1. Go to the FlightHub 2 Devices page, click Dock/Ground Station, click the Device Maintenance icon of the ground station in the device list to open the Device Maintenance page, and enable Remote Debugging first.
2. After Remote Debugging is enabled, go to Aircraft Control on the Device Maintenance page and enable the 4G switch.
3. Open the ground station Enhanced Transmission settings in the ground station device panel. If using eSIM, scan the QR code to purchase data. If using a nano-SIM card, switch the card type to SIM.

 © 2026 DJI All Rights Reserved.

4. Return to the Device Maintenance page, open the aircraft Enhanced Transmission settings, select 4G-1 or 4G-2, and manually switch the corresponding card type to SIM or eSIM.

- Manually select SIM or eSIM in the 4G-1 or 4G-2 settings. Each 4G setting can only select one type of card and will not switch automatically according to signal quality.
- In the Chinese mainland, eSIM is selected automatically when no nano-SIM card is inserted.
- eSIM is not supported overseas. Use a nano-SIM card.
- Switching between eSIM and nano-SIM takes approximately 20 seconds, during which data transmission will be interrupted. DO NOT switch during flight.

Using Enhanced Transmission

When the ground station is connected to a network (wired network or 4G network) and the Enhanced Transmission module is configured, the aircraft's 4G Enhanced Transmission can be enabled in either of the following ways:

- Go to the Devices page in DJI FlightHub 2, click **Dock/Ground Station** > to open Device Maintenance, enable Remote Debugging, and turn on the 4G switch under Aircraft Control.
- Go to the Project page in DJI FlightHub 2, click > to open the device window, click **Action** > **Remote Debugging**, and enable **4G Switch** under Aircraft Control.

Pay close attention to the video transmission signal strength after enabling Enhanced Transmission. Fly with caution.

Security Strategy

Based on safe flight considerations, Enhanced Transmission can only be enabled when the OcuSync video transmission is in effect. If the OcuSync link is disconnected during flight, it is not possible to disable Enhanced Transmission.

4G Network Requirements

4G transmission speed depends on the 4G signal strength at the aircraft's location and network congestion at the corresponding base station. Actual transmission performance depends closely on local 4G network conditions.

Therefore, when using Enhanced Transmission:

© 2026 DJI All Rights Reserved.

1. Operate in areas where the 4G signal is close to full bars for a better Enhanced Transmission experience.
2. After the OcuSync signal is disconnected, the aircraft will rely entirely on the 4G network, and the video transmission may lag or stutter. Fly with caution.
3. When the OcuSync signal is poor or disconnected, maintain a suitable flight altitude. In open areas, try to fly below 120 m for a better 4G signal.
4. For flight in the city with tall buildings, make sure to set a suitable RTH altitude (higher than the tallest building).
5. When the DJI FlightHub 2 indicates that the 4G video transmission signal is weak, make sure to fly with caution.

7.4 Troubleshooting Procedures

1. **How to solve the gimbal drift issue during flight?**

   Calibrate IMU and compass in DJI Enterprise App. If the problem persists, contact DJI Support.

2. **No function**

   Check whether the Intelligent Flight Battery has been activated by charging. If the problem persists, contact DJI Support.

3. **Power-on and start-up problems**

   Check if the battery has power. If yes, contact DJI Support if it cannot be started normally.

4. **Firmware update issues**

   Follow the instructions in the user manual to update the firmware. If the firmware update fails, restart all the devices and try again. If the problem persists, contact DJI Support.

5. **Restoring Factory Settings**

   Use DJI Enterprise App to reset to factory default settings.

6. **Shutdown and power-off problems**

   Contact DJI Support.

7. **How to identify improper handling or unsafe storage**

   Contact DJI Support.

 © 2026 DJI All Rights Reserved.

7.5 Risks and Warnings

When the aircraft detects a risk after powering on, there will be a warning prompt on DJI FlightHub 2. Pay attention to the list of situations below.

- If the location is not suitable for takeoff.
- If an obstacle is detected during flight.
- If the location is not suitable for landing.
- If the compass and IMU experience interference and need to be calibrated.
- Follow the on-screen instructions when prompted.

7.6 Disposal

Observe the local regulations related to electronic devices when disposing of the aircraft and remote controller.

Battery Disposal

Dispose of the batteries in specific recycling containers only after a complete discharge. DO NOT dispose of the batteries in regular trash containers. Strictly follow the local regulations regarding the disposal and recycling of batteries.

Dispose of a battery immediately if it cannot be powered on after over-discharging.

If the power button is disabled and the battery cannot be fully discharged, contact a professional battery disposal/recycling agency for further assistance.

7.7 C5 and C6 Certification

The aircraft model and corresponding UAS classes are listed below. Requirements and restrictions apply when using the aircraft in the European Economic Area (EEA). Make sure the remote crew is adequately trained and has the necessary competency for the intended operation.

Please use the drone in compliance with local regulations. Any risks arising from non-compliant usage are the sole responsibility of the user.

Model	Model M5TD
UAS Class	C5 C6

© 2026 DJI All Rights Reserved.

Maximum Take-Off Mass (MTOM)	3050 g
Sound Power Level	93 dB
Maximum Propeller Speed	5800 RPM
Maximum Characteristic Dimension (per (EU) 2019/947 Appendix I AMC1 Article 11 I.141)	929 mm

The C5 and C6 certification applications use the same equipment configuration. The applicable UAS class is subject to the certification documents and local regulations.

Maximum Dimensions (L×W×H):

392.5×416.2×230.8 mm (without propellers)

676.5×476.5×230.8 mm (with propellers)

Diagonal Wheelbase: 549 mm

MTOM Statement

The MTOM of DJI Matrice 5TD (Model M5TD) is 3050 g to comply with C5 & C6 requirements. The MTOM includes the mass of the parachute when installed.

⚠ DO NOT exceed the Maximum Take-Off Mass (MTOM) of 3050 g.

The C5 and C6 certifications use the same equipment configuration: DJI Matrice 5TD aircraft (Model: M5TD), DJI Dock 4 (Model: DOCK-04), and DJI AP1 Parachute (Model: AP-1). The aircraft may be operated under Standard Scenarios STS-01 and STS-02 as defined in (EU) 2019/947, subject to the applicable requirements.

Users must follow the instructions below to comply with the MTOM requirements for each model:

1. Make sure that when installing any external devices that the total mass of the aircraft does not exceed the Maximum Take-Off Mass. In addition, the external device must be installed in a location so that the center of gravity is maintained within the range of the aircraft top shell to keep the aircraft stable and that the vision systems, the infrared sensing systems, and the auxiliary lights are not blocked. Ensure that the Maximum Take-Off Mass (MTOM) does not exceed the specified limit for any flight.
2. DO NOT use any non-qualified replacement parts, such as intelligent flight batteries or propellers, etc.
3. DO NOT retrofit the aircraft.

 © 2026 DJI All Rights Reserved.

Standard Scenarios (STS)

The aircraft may be operated under Standard Scenarios STS-01 and STS-02 as defined in (EU) 2019/947, subject to the population density restrictions and remote crew training requirements specified therein. Operators must ensure compliance with all applicable requirements of (EU) 2019/947, including Appendix 5 (Operations Manual), when conducting STS operations.

- When used in the EU, the auxiliary LED is set to auto and cannot be changed. The aircraft Front Arm LEDs are always on when used in the EU and cannot be changed.
- Make sure to use official software for operations that require connecting to external devices, such as firmware updates and exporting media files.

List of Items, including qualified accessories

Item	Model Number	Dimensions	Mass
Battery	BPX340-12138-21.42	96.02×67.7×172.9 mm	925 g
AL2D Spotlight[1]	AL-2D	91×54×60 mm	115 g
AS2D Speaker[1]	AS-2D	132×47×54 mm	190 g
microSD Card	N/A	8.8×12.3×0.7 mm	0.26 g
DJI AP1 Parachute[1]	AP-1	92×70×56 mm	107 g
DJI Matrice 5TD Accessory Mount	AM340-1	117×126×70 mm	40 g
Propellers	1564F		

[1] Not included in the original package. Please be careful not to exceed the MTOM.

List of Spare and Replacement Parts

DJI Matrice 5TD Foldable Low-Noise Anti-Ice Propellers (Model: 1564F)

DJI Matrice 5TD Battery (Model: BPX340-12138-21.42)

Refer to the Maintenance Manual for information on list of wearing parts.

Direct Remote ID

1. Transport Method: Wi-Fi Beacon.
2. To upload the UAS Operator Registration Number to the aircraft, open the DJI Enterprise App, go to **Devices**, find the corresponding aircraft's Device Maintenance card, click **UAS Remote Identification**, and upload the number.

© 2026 DJI All Rights Reserved.

3. According to applicable rules, operators shall provide the correct registration number to broadcast in flight. Please make sure you understand and comply with the rules.

Geo Caging

Introduction

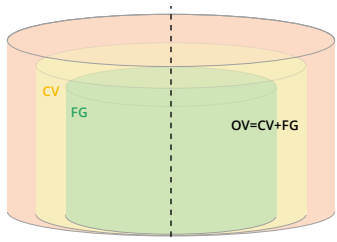

Flight Geography (FG)

In this area, the aircraft can take off, perform flight tasks, and land. If the aircraft approaches the FG edge horizontally or vertically, it will brake and hover, and a voice alert and a warning message will be triggered in DJI FlightHub 2.

The behavior after approaching the FG edge depends on the current flight mode:

- **Flight Route Task**: The aircraft brakes, hovers, and automatically returns to home.
- **Manual Control** (via the DJI FlightHub 2 virtual cockpit): The aircraft brakes and hovers but does not automatically return to home. The user can continue to control it manually to fly back to the FG.

Contingency Volume (CV)

In this area, the aircraft cannot take off or land, and you cannot initiate automatic features such as RTH and FlyTo tasks. If the aircraft is approaching CV edge or flies into the CV, it will brake and hover. You will receive a voice alert and a warning message in DJI FlightHub 2. You can still control the aircraft to fly back to the FG.

Operation Volume (OV)

OV includes the FG and the CV. If the aircraft flies out of the OV, the Flight Termination System (FTS) will be automatically activated. You will receive a voice alert and a warning message in DJI FlightHub 2.

To ensure safe landing, the aircraft can still detect its current status and low-battery RTH, auto-landing, and landing protection are still available in the OV.

Flight Termination System (FTS)

 © 2026 DJI All Rights Reserved.

FTS forces the aircraft to stop flying in emergencies. When FTS is activated, the aircraft propellers stop and, if installed, the parachute deploys.

If FTS is triggered, parts inspection, cleaning, and replacement are required after the FTS procedure. Refer to the Maintenance Manual for more information.

Using Geocaging (DJI FlightHub 2)

1. The organization admin can open DJI FlightHub 2, click **My Organization** in the upper-right corner, click ⚙ > **Edit**, and enable **GeoCaging**.

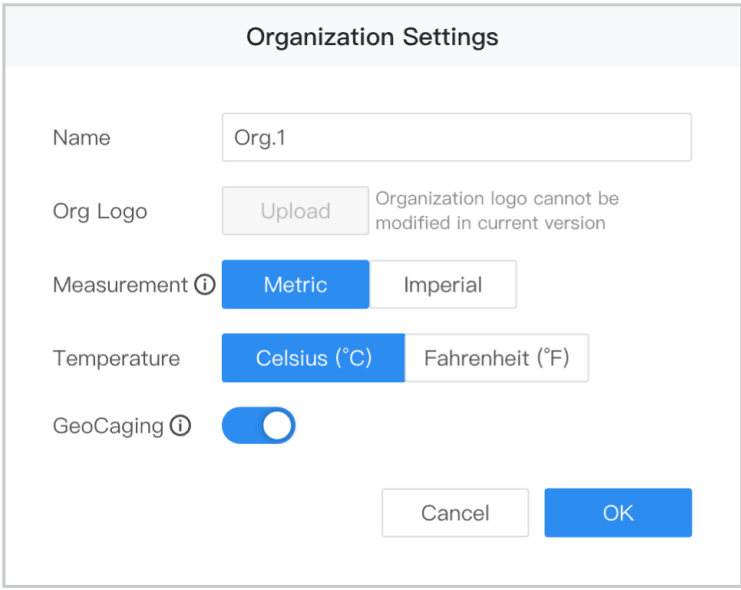

2. Open the Project page, click ⇥ > ▤ > **Action**, and enable **Remote Debugging** > **Geocaging**. You can modify the FG and CV radius and height, and the area is displayed on the map.

© 2026 DJI All Rights Reserved.

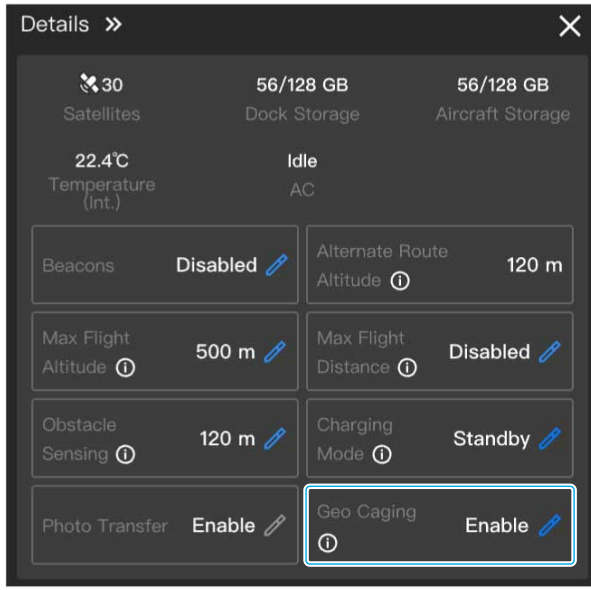

	FG	CV
Minimum Radius	100 m	FG radius + 100 m
Minimum Height	35 m	FG height + 35 m

The maximum configurable height of Geocaging is 1.5 km, and the maximum configurable radius is 30 km. Leave a safe distance of at least 100 m between the FG and the CV.

Height Definition: https://fh.dji.com/user-manual/en/real-time-project-information/online-project-information.html. The vertical height limit of Geocaging is measured above the takeoff point (ATO), and only one vertical limit is available.

- Geo Caging is not available for multi-dock tasks or multi-drone operations.
- Users can only modify the Geo Caging Settings when the aircraft is powered on and not performing any flight tasks.
- Make sure the FG height is higher than the aircraft RTH height.
- Geocaging does not conflict with the distance and height limits or GEO Zones. A flight task will be restricted if any of these limits is triggered.

The accuracy of the map scale display at the bottom right corner is 100%. The following actions are available on the map:

- View for the map orientation.

 © 2026 DJI All Rights Reserved.

- Click 3D to enable the 3D map. Press and hold the Control/Ctrl key and left button of the mouse together to rotate the map.
- Click ⓘ to view GEO Zone information.
- Click ⊕ and the project point of interest will be displayed in the middle of the web page.
- Click ◉ to view the map lab.
- : Lock mode, the aircraft will be displayed in the center and the map view will change following the aircraft movement.
- : Free mode, users can change the map view freely.
- Click ✈ to display AirSense warnings.

Display Warnings and Information

Takeoff Warnings: The aircraft cannot take off if the device or any task point is outside of the FG and the user will receive a warning message.

When Geocaging is enabled, the device checks its running status and monitors aircraft operation in real time. If Geocaging cannot function properly, the user will receive a warning message and the aircraft cannot take off.

Braking Distance in CV

When Geocaging is enabled, the aircraft will brake and hover when it reaches the Flight Geography (FG) boundary. The distance the aircraft travels from the moment it reaches the FG boundary until it comes to a stable hover consists of two parts:

- **Distance travelled**: The distance the aircraft continues to travel during the system response time (0.02 s) from the moment it reaches the FG boundary until braking begins.
- **Braking distance**: The distance the aircraft travels from the moment braking begins until it comes to a stable hover.

The sum of the two parts above is the total distance the aircraft travels beyond the FG.

The table below shows the distance travelled and the braking distance under different conditions when the aircraft flies out of the FG:

© 2026 DJI All Rights Reserved.

	Conditions	Distance Travelled	Braking Distance
Worst-case (horizontal)	• Flying perpendicular to FG • Flying at maximum horizontal flight speed • With a maximum wind speed resistance • Wind blowing perpendicular to FG in the flight direction • With a net mass • With a maximum takeoff mass	Approx. 0.3 m	Approx. 26 m
Typical (horizontal)	• Flying perpendicular to FG • Flying at average flight speed • With a net mass • Without wind	Approx. 0.1 m	Approx. 20 m
Worst-case (vertical)	• Flying at maximum ascend or descend speed • With a maximum vertical wind speed in direction of flight • With a net mass • With a maximum takeoff mass	Approx. 0.16 m	Approx. 4 m
Typical (vertical)	• Flying at average flight speed • Ascending or descending at nominal speed • With a net mass • Without wind	Approx. 0.05 m	Approx. 2 m

* The detailed information on the above conditions can be found in https://enterprise.dji.com/dock-4/specs.

This section applies to C6 category aircraft operating under the Specific Standard Scenario STS-02. The braking distance is used to determine the safety margin after the aircraft reaches the FG boundary.

- The standard deviation of GNSS: ±10 m (vertical) and ±10 m (horizontal).
- The aircraft hovering and flight accuracy range with RTK positioning in windless or breezy conditions: ±0.1 m (vertical) and ±0.1 m (horizontal).
- The maximum deviation between the aircraft location displayed on DJI FlightHub 2 and the actual location: 5 m.

 © 2026 DJI All Rights Reserved.

Flight Termination System (FTS)

Trigger Method

FTS will be automatically triggered when Geocaging is enabled and the aircraft flies out of the OV. For the aircraft behavior after FTS activation, including motor stop and parachute deployment, refer to Using the Parachute.

FTS can be triggered manually when the GNSS signal is weak or based on the user's judgment. For the DJI FlightHub 2 operation path and backup web trigger, refer to Using the Parachute.

FTS Status Check

The FTS is built into the aircraft and requires no additional module installation. It is available when the aircraft is powered on. The aircraft does not support starting the motors at idle on the ground. The FTS automatically performs a self-check when the aircraft is powered on. If the FTS module has an abnormality, such as a connection failure, a Health Management System (HMS) warning will be reported in DJI FlightHub 2.

Post Inspection

If FTS is triggered, parts inspection, cleaning, and replacement are required after the FTS procedure. Refer to the Maintenance Manual for more information.

Risk and Warnings

The FTS module uses the built-in cellular module. Make sure to operate in areas with a good 4G signal. If the FTS signal is lost for more than 120 s, a warning will appear. The system will attempt to restore the signal every 500 ms after the signal is lost. Check the cellular module's internet connection and try to restore the connection.

The FTS has no operational distance limit. In areas with a good 4G signal, the aircraft can be controlled through the FTS.

EASA Notice

Make sure to read the Drone Information Notices document included in the package before use.

Visit the link below for more EASA notice information on traceability.

https://www.easa.europa.eu/en/document-library/general-publications/drones-information-notices

© 2026 DJI All Rights Reserved.

Original Instructions

This manual is provided by SZ DJI Technology, Inc., and the content is subject to change.

Address: Lobby of T2, DJI Sky City, No. 53 Xianyuan Road, Xili Community, Xili Street, Nanshan District, Shenzhen, China, 518055.

7.8 FAR Remote ID Compliance Information

The unmanned aircraft system is equipped with a Remote ID system that meets the requirements of 14 CFR Part 89.

- The aircraft automatically initiates a pre-flight self-test (PFST) of the Remote ID system before takeoff and cannot take off if it does not pass the PFST [1]. The results of the PFST of the Remote ID system can be viewed in a DJI flight control app such as DJI Enterprise App or in a DJI cloud platform such as DJI FlightHub 2.
- The aircraft monitors Remote ID system functionality from preflight until shutdown. The Matrice 5TD supports multi-aircraft avoidance based on Remote ID. Remote ID alerts are displayed as messages in DJI FlightHub 2 and DJI Enterprise App.
- Developers who develop third-party applications based on the DJI Mobile SDK shall obtain and display the PFST results and the failure status of the Remote ID system during operation by calling specific APIs. [2]
- Developers who develop third-party platforms based on the DJI Cloud API shall obtain and display the PFST results and the failure status of the Remote ID system during operation by calling specific APIs. [3]
- You can visit the official website of FAA to learn more about aircraft registration and Remote ID requirements.

[1] The pass criterion for PFST is that the hardware and software of the Remote ID required-data source and transmitter radio in the Remote ID system are functioning properly.

[2] For detailed APIs information, please visit https://developer.dji.com/mobile-sdk/

[3] For detailed APIs information, please visit https://developer.dji.com/cloud-api/

7.9 Frequently Asked Questions and Solutions

Visit the following link for frequently asked questions and solutions:

https://enterprise.dji.com/dock-4/faq

 © 2026 DJI All Rights Reserved.

7.10 After-sales Service

Warranty Policy

Warranty period may vary according to local laws and regulations.

Visit https://www.dji.com/service/policy to check the product warranty period and warranty policy.

Handling Procedures for Flight Accident

When your aircraft encounters a flight accident, please follow the steps below to handle it.

Flyaway Accident

1. Contact DJI Support immediately to describe the flyaway incident, and state whether the parachute deployed and the on-site conditions.
2. Check the flight records via DJI FlightHub 2, and locate the aircraft and parachute based on the actual terrain and the audible and visual signals of the parachute.
3. Export the flight controller data and flight records via DJI FlightHub 2, and contact DJI Support or the local dealer to request data analysis assistance.
4. DJI will provide a solution based on the analysis results.

Collision or Crash Accident

1. After the accident, take photos of the aircraft status and the surrounding environment promptly, and record the aircraft status before the accident and the course of the accident. If the parachute has been fully or partially deployed, DO NOT reset, disassemble, clean, or continue using it, so as not to affect subsequent inspection and accident analysis.
2. Make sure the aircraft is powered off, remove its battery, and store the battery in an isolation box. Note: If the accident is severe, DO NOT power on the aircraft again, as this may burn the internal wiring and cause greater loss.
3. If the aircraft can be powered on normally, export the flight controller data and flight logs via DJI FlightHub 2 and contact DJI Support or the local dealer for data analysis assistance.
4. Send the aircraft back for inspection as instructed by DJI Support or the local dealer. If the parachute has been deployed, it does not support factory repair or reuse. If you dispute the deployment trigger, send the parachute back for log analysis as instructed.

© 2026 DJI All Rights Reserved.

Shipping the Product for Repair

Choose one of the methods below to ship the product for repair:

1. **Official Website Self-Service Repair**

   Log in to the DJI self-service repair website https://repair.dji.com/repair/index and follow the on-screen instructions to complete the Mail-In Repair service.

2. **Contact Local Dealer for Assistance**

   Contact your dealer and describe the type of service required. The dealer will help arrange repair shipping.

3. **Official Support Hotline Service**

   Call the technical support number for your region and describe the required service, such as repair, return, or replacement; send the product back as instructed.

   Visit the following website to view phone support options for the hotline service:

   https://www.dji.com/support

 © 2026 DJI All Rights Reserved.

WE ARE HERE FOR YOU

Contact
DJI SUPPORT

The content is subject to change without prior notice.
Download the latest version from

https://enterprise.dji.com/dock-4/downloads

If you have questions or suggestions about this manual, contact us at the following email address:
DocSupport@dji.com.

DJI and MATRICE are trademarks of DJI.
Copyright © 2026 DJI All Rights Reserved.